www.surveon.com

Surveon
Complete Megapixel Solutions



2016 Product Catalog

Network Camera | NVR | VMS | Storage



Company Profile

With continuous investment in research and development, Surveon's expertise covers all aspects of surveillance system, including professional camera design, high-availability video storage, embedded firmware, and video management solutions. All the products are design in-house and manufactured in the ISO 9001 and ISO 14001 certified self-owned production sites. Surveon's highly integrated and reliable surveillance solutions have been proven to minimize compatibility risks and elevate beneficial results for business partners.

Surveon's commitment to excellence is built on the knowledge and expertise of the following four aspects: Engineering Design, Test & Certification, Production Quality, and Service & Support.

Engineering Design

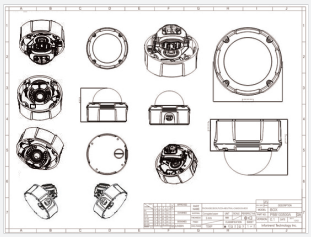

Persisting in the principle of quality and enduringness, Surveon is committed to ensure customers' satisfaction through product excellence. A strong focus on research and development, our cameras are designed and manufactured in house with industrial-grade components to help maintain zero failure rate for 24/7 operations. Image engineering is what Surveon values the most, supplying customers only with the best quality images and highest reliability.

Test & Certification



Surveon follows strict test plans to certify the superb quality, including the temperature test, humidity test, burn-in test, vibration test, drop test, image quality assurance test, megapixel recording and storage quality test. Surveon is devoted to contribute to environmental sustainability and our eco-friendly products are compliance with safety and emission regulations such as Restriction of Hazardous Substances (RoHS), LVD, FCC, CE, and Gost.

Production Quality



Surveon's self-owned production site is certified with ISO 9001 and ISO 14001. With validated instruments and machines, each production process is guaranteed to achieve the desired results. The implementation on environmental management system is to prevent pollution and sustain development. Surveon values and protects the rights as well as the interests of customers.

Service & Support



Surveon provides users the highest level of reliability with best-in-class quality and services. Our extensive 3-year warranty guarantees and employs a comprehensive support network that delivers professional services, around the world and around the clock.

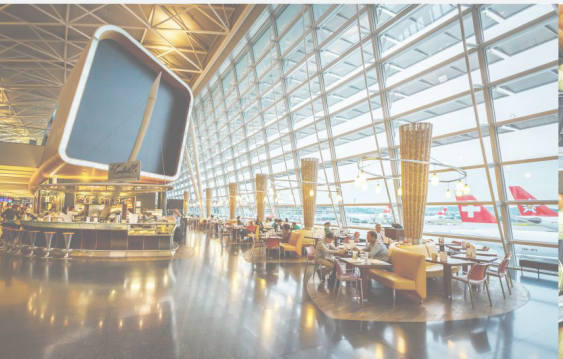





Product Line-up

Network Camera Selection Table 2
Network Video Recorder Selection Table 7

Network Camera
Key Features and Core Technology 13
Compact Camera
CAM1200/1201 15
CAM1320S2 16
CAM1420S2 17
CAM2311SC 18
CAM2511SC 19
Box Camera
CAM2331SC/SP 20
CAM2411SC 21
CAM2411HI 22
CAM2511 23
Bullet Camera
CAM3351R4/R6 24
CAM3361LV 25
CAM3371EV/EM 26
CAM3451R3/R6 27
CAM3461LV 28
CAM3471HEV/HEM 29
CAM3471HI 30
CAM3571M/MP/VP 31
Indoor Dome Camera
CAM4211 32
CAM4221 33
CAM4311S2 34
CAM4321LV 35
CAM4410S2 36
CAM4411S2/S3/S4/S6 37
CAM4421LV 38
CAM4521LV 39
Outdoor Dome Camera
CAM4351R2 40
CAM4361LV 41
CAM4371HEV/HEM 42
CAM4461LV 43
CAM4471HEV/HEM 44
CAM4471HI 45
CAM4561LV 46
CAM4571M/MP/VP 47
PT/PTZ Dome Camera
CAM5321S4 48
CAM5330SZ 49
CAM6181 50
CAM6351 51
CAM6351A 52
CAM6471EZ 53
Fisheye Camera
CAM7510 54
CAM7511 55
CAM4571RF 56

NVR
Key Features and Core Technology 58
Professional Series
SMR2100-4/9 60
SMR2110-16/24/32 61
SMR5110-16/24/32 62
NVR3104-4/9/16 63
NVR3308-16/24/32/48/64 64
Enterprise Series
SMR8300-16/24/32/48/64 65
NVR53116-16/24/32/48/64 66
Corporate Series
NVR2104-16/24/32/48/64 67
NVR7316-64/96/128 68
NVR7812/7816 69

Storage
ESDS 1012 71
ESDS 1016 72
JB 2012 73
JB 2016 76

Video Management Solutions
VMS Enterprise 78
Surveon Control Center (SCC) 79
SurveOne 80

Accessory
CS Mount Lens 82
Peripheral 82
Camera Housing/ Housings Bracket 82
Bracket 83

Partners
Partners 83

Compact / Box Camera Selection Table



	CAM 1200	CAM 1201	CAM 1320S2	CAM 1420S2	CAM 2311SC	CAM 2511SC	CAM 2331SC	CAM 2331SP	CAM 2411SC	CAM 2411HI	CAM 2511
Form Type	Mini Box	Mini Box	Mini Dome	Mini Dome	Mini Box	Mini Box	Box	Box	Box	Box	Box
Max. Resolution	1M	1M	2M	3M	2M	5M	2M	2M	3M	3M	5M
Day/Night		ICR			ICR	ICR	ICR	ICR	ICR	ICR	ICR
IR LED											
Lens Type	CS Mount	CS Mount	Fixed	Fixed	CS Mount	CS Mount	CS Mount	CS Mount	CS Mount	CS Mount	CS Mount
Auto Focus											
Optical Zoom											
PTZ Control							V	V	V	V	V
Iris Control	Fixed	Fixed	Fixed	Fixed	DC-Iris	DC-Iris	DC-Iris	P-iris	DC-Iris	DC-Iris	DC-Iris
Audio In	V	V	V	V	V	V	V	V	V	V	V
Audio Out	V	V			V	V	V	V	V	V	V
Alarm DI/DO					V	V	V	V	V	V	V
Local Storage					V	V	V	V	V	V	V
PoE	V	V	V	V	V	V	V	V	V	V	V
BNC Out							V	V	V	V	V
Indoor	V	V	V	V	V	V	V	V	V	V	V
Outdoor (IP66)											
Vandal Proof (IK10)											
Wide Temperature											
WDR	V	V	V	V	V	V	V	V	V (HDR)	V (HDR)	V
ROI			V	V	V	V	V	V	V	V	V
2D/3D NR			V	V	V	V	V	V	V	V	V
Video Intelligent	V	V	V	V	V	V	V	V	V	V (Adv.)	V
Low Light					V		V	V	V	V	
Wi-Fi	V	V									
Page	15	15	16	17	18	19	20	20	21	22	23

Bullet Camera Selection Table



	CAM 3351R4	CAM 3351R6	CAM 3361LV	CAM 3371EV	CAM 3371EM	CAM 3451R3	CAM 3451R6	CAM 3461LV	CAM 3471HEV	CAM 3471HEM	CAM 3471HI
Form Type	Bullet	Bullet	Bullet	Bullet	Bullet	Bullet	Bullet	Bullet	Bullet	Bullet	Bullet
Max. Resolution	2M	2M	2M	2M	2M	3M	3M	3M	3M	3M	3M
Day/Night	ICR	ICR	ICR	ICR	ICR	ICR	ICR	ICR	ICR	ICR	ICR
IR LED	V	V	V	V	V	V	V	V	V	V	V
Lens Type	Fixed	Fixed	Varifocal	Varifocal	Motorized	Fixed	Fixed	Varifocal	Varifocal	Motorized	Motorized
Auto Focus					V					V	V
Optical Zoom					3x Zoom					3x Zoom	3x Zoom
PTZ Control											
Iris Control	Fixed	Fixed	Auto Electronic	P-iris	P-iris	Fixed	Fixed	Auto Electronic	P-iris	P-iris	P-iris
Audio In				V	V				V	V	V
Audio Out				V	V				V	V	V
Alarm DI/DO				V	V				V	V	V
Local Storage	V	V	V	V	V	V	V	V	V	V	V
PoE	V	V	V	V	V	V	V	V	V	V	V
BNC Out				V					V		
Indoor											
Outdoor (IP66)	V	V	V	V	V	V	V	V	V	V	V
Vandal Proof (IK10)											
Wide Temperature				V	V				V	V	V
WDR	V	V	V	V	V	V	V	V	V (HDR)	V (HDR)	V (HDR)
ROI	V	V	V	V	V	V	V	V	V	V	V
2D/3D NR	V	V	V	V	V	V	V	V	V	V	V
Video Intelligent	V	V	V	V	V	V	V	V	V	V	V (Adv.)
Low Light	V	V	V	V	V				V	V	V
Wi-Fi											
Page	24	24	25	26	26	27	27	28	29	29	30

Bullet / Indoor Dome Camera Selection Table



	CAM 3571VP	CAM 3571M	CAM 3571MP	CAM 4211	CAM 4221	CAM 4311S2	CAM 4321LV	CAM 4410S2	CAM 4411Sx	CAM 4421LV	CAM 4521LV
Form Type	Bullet	Bullet	Bullet	Indoor Dome	Indoor Dome	Indoor Dome	Indoor Dome	Indoor Dome	Indoor Dome	Indoor Dome	Indoor Dome
Max. Resolution	5M	5M	5M	1M	1M	2M	2M	3M	3M	3M	5M
Day/Night	ICR	ICR	ICR	ICR	ICR	ICR	ICR		ICR	ICR	ICR
IR LED	V	V	V	V		V	V		V	V	V
Lens Type	Varifocal	Motorized	Motorized	Fixed	Varifocal	Fixed	Varifocal	Fixed	Fixed	Varifocal	Varifocal
Auto Focus		V	V								
Optical Zoom		3x Zoom	3x Zoom								
PTZ Control											
Iris Control	P-iris	DC-Iris	P-iris	Fixed	Auto Electronic	Fixed	Auto Electronic	Fixed	Fixed	Auto Electronic	Auto Electronic
Audio In	V	V	V	V	V	V	V	V	V	V	V
Audio Out	V	V	V	V	V	V	V	V	V	V	V
Alarm DI/DO	V	V	V	V	V	V	V	V	V	V	V
Local Storage	V	V	V	V	V	V	V	V	V	V	V
PoE	V	V	V	V	V	V	V	V	V	V	V
BNC Out	V										
Indoor				V	V	V	V	V	V	V	V
Outdoor (IP66)	V	V	V								
Vandal Proof (IK10)											
Wide Temperature	V	V	V								
WDR	V	V	V	V	V	V	V	V	V	V	V
ROI	V	V	V			V	V	V	V	V	V
2D/3D NR	V	V	V			V	V	V	V	V	V
Video Intelligent	V	V	V	V	V	V	V	V	V	V	V
Low Light						V	V				
Wi-Fi											
Page	31	31	31	32	33	34	35	36	37	38	39

Outdoor Dome Camera Selection Table



	CAM 4351R2	CAM 4361LV	CAM 4371HEV	CAM 4371HEM	CAM 4461LV	CAM 4471HEV	CAM 4471HEM	CAM 4471HI	CAM 4561LV	CAM 4571VP	CAM 4571M
Form Type	Outdoor Dome	Outdoor Dome	Outdoor Dome	Outdoor Dome	Outdoor Dome	Outdoor Dome	Outdoor Dome	Outdoor Dome	Outdoor Dome	Outdoor Dome	Outdoor Dome
Max. Resolution	2M	2M	2M	2M	3M	3M	3M	3M	5M	5M	5M
Day/Night	ICR	ICR	ICR	ICR	ICR	ICR	ICR	ICR	ICR	ICR	ICR
IR LED	V	V	V	V	V	V	V	V	V	V	V
Lens Type	Fixed	Varifocal	Varifocal	Motorized	Varifocal	Varifocal	Motorized	Motorized	Varifocal	Varifocal	Motorized
Auto Focus				V			V	V			V
Optical Zoom				3x Zoom			3x Zoom	3x Zoom			3x Zoom
PTZ Control											
Iris Control	Fixed	Auto Electronic	P-iris	P-iris	Auto Electronic	P-iris	P-iris	P-iris	Auto Electronic	P-iris	DC-Iris
Audio In			V	V		V	V	V		V	V
Audio Out			V	V		V	V	V		V	V
Alarm DI/DO			V	V		V	V	V		V	V
Local Storage	V	V	V	V	V	V	V	V	V	V	V
PoE	V	V	V	V	V	V	V	V	V	V	V
BNC Out			V			V				V	
Indoor											
Outdoor (IP66)	V	V	V	V	V	V	V	V	V	V	V
Vandal Proof (IK10)	V	V	V	V	V	V	V	V	V	V	V
Wide Temperature			V	V		V	V	V		V	V
WDR	V	V	V (HDR)	V (HDR)	V	V (HDR)	V (HDR)	V (HDR)	V	V	V
ROI	V	V	V	V	V	V	V	V	V	V	V
2D/3D NR	V	V	V	V	V	V	V	V	V	V	V
Video Intelligent	V	V	V	V	V	V	V	V (Adv.)	V	V	V
Low Light	V	V	V	V		V	V	V			
Wi-Fi											
Page	40	41	42	42	43	44	44	45	46	47	47

Outdoor / PTZ / Speed Dome / Fisheye Camera Selection Table



	CAM 4571MP	CAM 5321S4	CAM 5330SZ	CAM 6181	CAM 6351	CAM 6351A	CAM 6471EZ	CAM 7510	CAM 7511	CAM 4571RF
Form Type	Outdoor Dome	PT Dome	PTZ Dome	Speed Dome	Speed Dome	Speed Dome	Speed Dome	Fisheye	Fisheye	Fisheye
Max. Resolution	5M	2M	2M	D1	2M	2M	3M	5M	5M	5M
Day/Night	ICR	ICR		ICR	ICR	ICR	ICR		ICR	ICR
IR LED	V	V								
Lens Type	Motorized	Fixed	10x Zoom	36x Zoom	20x Zoom	20x Zoom	30x Zoom	Fisheye	Fisheye	Fisheye
Auto Focus	V		V	V	V	V	V			
Optical Zoom	3x Zoom		10x Zoom	36x Zoom	20x Zoom	20x Zoom	20x Zoom			
PTZ Control		V	V	V	V	V	V			
Iris Control	P-iris	Fixed	DC-Iris	DC-Iris	DC-Iris	DC-Iris	DC-Iris	Fixed	Fixed	Fixed
Audio In	V	V	V	V	V	V	V	V	V	
Audio Out	V		V	V	V	V	V	V	V	
Alarm DI/DO	V		V	V	V	V	V	V	V	
Local Storage	V	V	V	V	V	V	V	V	V	V
PoE	V	V	V	V	V	V	V	V	V	V
BNC Out										
Indoor		V	V					V	V	
Outdoor (IP66)	V			V	V	V	V			V
Vandal Proof (IK10)	V									V
Wide Temperature	V			V	V	V	V			
WDR	V	V	V	V	V	V (True WDR)	V	V	V	V
ROI	V	V	V	V	V	V	V	V	V	V
2D/3D NR	V	V	V	V	V	V	V	V	V	V
Video Intelligent	V	V	V	V	V	V	V	V	V	V
Low Light						V				
Wi-Fi										
Page	47	48	49	50	51	52	53	54	55	56

Professional Series Network Video Recorder Selection Table



	Professional								
	SMR2100P-4	SMR2100P-9	SMR2110P-16	SMR2110P-24	SMR2110P-32	SMR5110P-16	SMR5110P-24	SMR5110P-32	NVR3104P1-4
Architecture	All-in-One	All-in-One	All-in-One	All-in-One	All-in-One	All-in-One	All-in-One	All-in-One	All-in-One
Form Factor	Desktop	Desktop	Desktop	Desktop	Desktop	Desktop	Desktop	Desktop	Desktop
IP Channel Number	4	9	16	24	32	16	24	32	4
HDD Number	2x SATA	2x SATA	2x SATA	2x SATA	2x SATA	5x SATA	5x SATA	5x SATA	4x SATA
RAID	RAID 1	RAID 1	RAID 1	RAID 1	RAID 1	RAID 1, 5, 6	RAID 1, 5, 6	RAID 1, 5, 6	RAID 1, 5, 6
Storage Expansion			iSCSI/NAS	iSCSI/NAS	iSCSI/NAS	iSCSI/NAS	iSCSI/NAS	iSCSI/NAS	iSCSI/NAS
Hot-Swappable	V	V	V	V	V	V	V	V	
Cableless Design									
Modules Design									
Server Processor	Intel® Dual Core 1.8GHz	Intel® Dual Core 1.8GHz	Intel® Celeron Quad Core 2.0GHz	Intel® Celeron Quad Core 2.0GHz	Intel® Celeron Quad Core 2.0GHz	Intel® Celeron Quad Core 2.0GHz	Intel® Celeron Quad Core 2.0GHz	Intel® Celeron Quad Core 2.0GHz	Intel® Celeron Dual Core 1.8GHz
System Memory	DDR3 2GB	DDR3 2GB	DDR3L 4GB	DDR3L 4GB	DDR3L 4GB	DDR3L 4GB	DDR3L 4GB	DDR3L 4GB	DDR3 2GB
Video Intelligence	Max. 4ch	Max. 4ch	Max. 4ch	Max. 4ch	Max. 4ch	Max. 4ch	Max. 4ch	Max. 4ch	Max. 4ch
Local Live View	V	V	V	V	V	V	V	V	V
Video Output	1x VGA	1x VGA	1x DVI-I	1x DVI-I	1x DVI-I	1x DVI-I	1x DVI-I	1x DVI-I	1x VGA, 1x HDMI, 1x DVI-D
USB Port	4	4	4	4	4	4	4	4	6
LAN Port	2x Gigabit	2x Gigabit	1x Gigabit	1x Gigabit	1x Gigabit	1x Gigabit	1x Gigabit	1x Gigabit	1x Gigabit
Power Consumption	43W	43W	48W	48W	48W	90W	90W	90W	250W
Redundant Power									
Chassis									
Page	60	60	61	61	61	62	62	62	63

Professional Series Network Video Recorder Selection Table



	Professional								
	NVR3104P1-9	NVR3104P1-16	NVR3308E1-16	NVR3308E1-24	NVR3308E1-32	NVR3308A1-16	NVR3308A1-24	NVR3308A1-32	NVR3308A1-48
Architecture	All-in-One	All-in-One	All-in-One	All-in-One	All-in-One	All-in-One	All-in-One	All-in-One	All-in-One
Form Factor	Desktop	Desktop	Desktop	Desktop	Desktop	Desktop	Desktop	Desktop	Desktop
IP Channel Number	9	16	16	24	32	16	24	32	48
HDD Number	4x SATA	4x SATA	8x SATA	8x SATA	8x SATA	8x SATA	8x SATA	8x SATA	8x SATA
RAID	RAID 1, 5, 6	RAID 1, 5, 6	RAID 1, 5, 6	RAID 1, 5, 6	RAID 1, 5, 6	RAID 1, 5, 6	RAID 1, 5, 6	RAID 1, 5, 6	RAID 1, 5, 6
Storage Expansion	iSCSI/NAS	iSCSI/NAS	iSCSI/NAS	iSCSI/NAS	iSCSI/NAS	iSCSI/NAS	iSCSI/NAS	iSCSI/NAS	iSCSI/NAS
Hot-Swappable									
Cableless Design									
Modules Design									
Server Processor	Intel® Celeron Dual Core 1.8GHz	Intel® Celeron Dual Core 1.8GHz	Intel® Core i3 Dual Core 3.3GHz	Intel® Core i3 Dual Core 3.3GHz	Intel® Core i3 Dual Core 3.3GHz	Intel® Core i7 Quad Core 3.4GHz	Intel® Core i7 Quad Core 3.4GHz	Intel® Core i7 Quad Core 3.4GHz	Intel® Core i7 Quad Core 3.4GHz
System Memory	DDR3 2GB	DDR3 2GB	DDR3 4GB	DDR3 4GB	DDR3 4GB	DDR3 4GB	DDR3 4GB	DDR3 4GB	DDR3 4GB
Video Intelligence	Max. 4ch	Max. 4ch	Max. 8ch	Max. 8ch	Max. 8ch	Max. 16ch	Max. 16ch	Max. 16ch	Max. 16ch
Local Live View	V	V	V	V	V	V	V	V	V
Video Output	1x VGA, 1x HDMI, 1x DVI-D	1x VGA, 1x HDMI, 1x DVI-D	1x VGA, 1x HDMI	1x VGA, 1x HDMI	1x VGA, 1x HDMI	1x VGA, 1x HDMI	1x VGA, 1x HDMI	1x VGA, 1x HDMI	1x VGA, 1x HDMI
USB Port	6	6	8	8	8	8	8	8	8
LAN Port	1x Gigabit	1x Gigabit	2x Gigabit	2x Gigabit	2x Gigabit	2x Gigabit	2x Gigabit	2x Gigabit	2x Gigabit
Power Consumption	250W	250W	250W	250W	250W	250W	250W	250W	250W
Redundant Power									
Chassis									
Page	63	63	64	64	64	64	64	64	64

Professional / Enterprise Series Network Video Recorder Selection Table



	Professional	Enterprise							
	NVR3308A1-64	SMR8300E-16	SMR8300E-24	SMR8300E-32	SMR8300A-16	SMR8300A-24	SMR8300A-32	SMR8300A-48	SMR8300A-64
Architecture	All-in-One	All-in-One	All-in-One	All-in-One	All-in-One	All-in-One	All-in-One	All-in-One	All-in-One
Form Factor	Desktop	Desktop	Desktop	Desktop	Desktop	Desktop	Desktop	Desktop	Desktop
IP Channel Number	64	16	24	32	16	24	32	48	64
HDD Number	8x SATA	8x SATA	8x SATA	8x SATA	8x SATA	8x SATA	8x SATA	8x SATA	8x SATA
RAID	RAID 1, 5, 6	RAID 1, 5, 6	RAID 1, 5, 6	RAID 1, 5, 6	RAID 1, 5, 6	RAID 1, 5, 6	RAID 1, 5, 6	RAID 1, 5, 6	RAID 1, 5, 6
Storage Expansion	iSCSI/NAS	iSCSI/NAS	iSCSI/NAS	iSCSI/NAS	iSCSI/NAS	iSCSI/NAS	iSCSI/NAS	iSCSI/NAS	iSCSI/NAS
Hot-Swappable		V	V	V	V	V	V	V	V
Cableless Design									
Modules Design									
Server Processor	Intel® Core i7 Quad Core 3.4GHz	Intel® Core i3 Dual Core 3.3GHz	Intel® Core i3 Dual Core 3.3GHz	Intel® Core i3 Dual Core 3.3GHz	Intel® Core i7 Quad Core 3.4GHz	Intel® Core i7 Quad Core 3.4GHz	Intel® Core i7 Quad Core 3.4GHz	Intel® Core i7 Quad Core 3.4GHz	Intel® Core i7 Quad Core 3.4GHz
System Memory	DDR3 4GB	DDR3 4GB	DDR3 4GB	DDR3 4GB	DDR3 4GB	DDR3 4GB	DDR3 4GB	DDR3 4GB	DDR3 4GB
Video Intelligence	Max. 16ch	Max. 8ch	Max. 8ch	Max. 8ch	Max. 16ch	Max. 16ch	Max. 16ch	Max. 16ch	Max. 16ch
Local Live View	V	V	V	V	V	V	V	V	V
Video Output	1x VGA, 1x HDMI	1x VGA, 1x HDMI	1x VGA, 1x HDMI	1x VGA, 1x HDMI	1x VGA, 1x HDMI	1x VGA, 1x HDMI	1x VGA, 1x HDMI	1x VGA, 1x HDMI	1x VGA, 1x HDMI
USB Port	8	6	6	6	6	6	6	6	6
LAN Port	2x Gigabit	2x Gigabit	2x Gigabit	2x Gigabit	2x Gigabit	2x Gigabit	2x Gigabit	2x Gigabit	2x Gigabit
Power Consumption	250W	430W	430W	430W	430W	430W	430W	430W	430W
Redundant Power									
Chassis									
Page	64	65	65	65	65	65	65	65	65

Enterprise / Corporate Series Network Video Recorder Selection Table



	Enterprise								Corporate
	NVR5316E1-16	NVR5316E1-24	NVR5316E1-32	NVR5316A1-16	NVR5316A1-24	NVR5316A1-32	NVR5316A1-48	NVR5316A1-64	NVR2104-16
Architecture	Client-Server	Client-Server	Client-Server	Client-Server	Client-Server	Client-Server	Client-Server	Client-Server	Client-Server
Form Factor	RackMount	RackMount	RackMount	RackMount	RackMount	RackMount	RackMount	RackMount	RackMount
IP Channel Number	16	24	32	16	24	32	48	64	16
HDD Number	16x SATA	16x SATA	16x SATA	16x SATA	16x SATA	16x SATA	16x SATA	16x SATA	Up to 240 SATA
RAID	RAID 1, 5, 6	RAID 1, 5, 6	RAID 1, 5, 6	RAID 1, 5, 6	RAID 1, 5, 6	RAID 1, 5, 6	RAID 1, 5, 6	RAID 1, 5, 6	RAID 0, 1 (0+1), 3, 5, 6, 10, 30, 50, 60
Storage Expansion	iSCSI/NAS/JBOD	iSCSI/NAS/JBOD	iSCSI/NAS/JBOD	iSCSI/NAS/JBOD	iSCSI/NAS/JBOD	iSCSI/NAS/JBOD	iSCSI/NAS/JBOD	iSCSI/NAS/JBOD	iSCSI/SAS
Hot-Swappable	V	V	V	V	V	V	V	V	V (Storage)
Cableless Design	V	V	V	V	V	V	V	V	V (Storage)
Modules Design	V	V	V	V	V	V	V	V	V (Storage)
Server Processor	Intel® Core i3 Dual Core 3.5GHz	Intel® Core i3 Dual Core 3.5GHz	Intel® Core i3 Dual Core 3.5GHz	Intel® Xeon E3 Quad Core 3.2GHz	Intel® Xeon E3 Quad Core 3.2GHz	Intel® Xeon E3 Quad Core 3.2GHz	Intel® Xeon E3 Quad Core 3.2GHz	Intel® Xeon E3 Quad Core 3.2GHz	Intel Core i3 3.3GHz or Intel Xeon 3.2GHz
System Memory	DDR3 4GB	DDR3 4GB	DDR3 4GB	DDR3 4GB	DDR3 4GB	DDR3 4GB	DDR3 4GB	DDR3 4GB	DDR3 4GB
Video Intelligence	Max. 8ch	Max. 8ch	Max. 8ch	Max. 16ch	Max. 16ch	Max. 16ch	Max. 16ch	Max. 16ch	Max. 32ch
Local Live View	V	V	V	V	V	V	V	V	
Video Output	1x VGA, 2x HDMI	1x VGA, 2x HDMI	1x VGA, 2x HDMI	1x VGA, 2x HDMI	1x VGA, 2x HDMI	1x VGA, 2x HDMI	1x VGA, 2x HDMI	1x VGA, 2x HDMI	1x VGA
USB Port	4	4	4	4	4	4	4	4	2
LAN Port	2x Gigabit	2x Gigabit	2x Gigabit	2x Gigabit	2x Gigabit	2x Gigabit	2x Gigabit	2x Gigabit	2x Gigabit
Power Consumption	530W	530W	530W	530W	530W	530W	530W	530W	350W
Redundant Power	V	V	V	V	V	V	V	V	V (Storage)
Chassis	3U 19" Rack	3U 19" Rack	3U 19" Rack	3U 19" Rack	3U 19" Rack	3U 19" Rack	3U 19" Rack	3U 19" Rack	1U 19" Rack
Page	66	66	66	66	66	66	66	66	67

Corporate Series Network Video Recorder Selection Table



	Corporate								
	NVR2104-24	NVR2104-32	NVR2104-48	NVR2104-64	NVR7316A1-64	NVR7316A1-96	NVR7316A1-128	NVR7812	NVR7816
Architecture	Client-Server	Client-Server	Client-Server	Client-Server	Client-Server	Client-Server	Client-Server	Client-Server	Client-Server
Form Factor	RackMount	RackMount	RackMount	RackMount	RackMount	RackMount	RackMount	RackMount	RackMount
IP Channel Number	24	32	48	64	64	96	128	Up to 150	Up to 150
HDD Number	Up to 240 SATA	Up to 240 SATA	Up to 240 SATA	Up to 240 SATA	16x SATA	16x SATA	16x SATA	16x SATA	16x SATA
RAID	RAID 0, 1 (0+1), 3, 5, 6, 10, 30, 50, 60	RAID 0, 1 (0+1), 3, 5, 6, 10, 30, 50, 60	RAID 0, 1 (0+1), 3, 5, 6, 10, 30, 50, 60	RAID 0, 1 (0+1), 3, 5, 6, 10, 30, 50, 60	RAID 0, 1, 5, 6, 10, 50, 60	RAID 0, 1, 5, 6, 10, 50, 60	RAID 0, 1, 5, 6, 10, 50, 60	RAID 0, 1, 5, 6, 10, 50, 60	RAID 0, 1, 5, 6, 10, 50, 60
Storage Expansion	iSCSI/SAS	iSCSI/SAS	iSCSI/SAS	iSCSI/SAS	iSCSI/NAS/JBOD	iSCSI/NAS/JBOD	iSCSI/NAS/JBOD	iSCSI/SAS/JBOD	iSCSI/SAS/JBOD
Hot-Swappable	V (Storage)	V (Storage)	V (Storage)	V (Storage)	V	V	V	V	V
Cableless Design	V (Storage)	V (Storage)	V (Storage)	V (Storage)	V	V	V	V	V
Modules Design	V (Storage)	V (Storage)	V (Storage)	V (Storage)	V	V	V	V	V
Server Processor	Intel Core i3 3.3GHz or Intel Xeon 3.2GHz	Intel Core i3 3.3GHz or Intel Xeon 3.2GHz	Intel Core i3 3.3GHz or Intel Xeon 3.2GHz	Intel Core i3 3.3GHz or Intel Xeon 3.2GHz	Intel® Xeon E3 Quad Core 3.2GHz	Intel® Xeon E3 Quad Core 3.2GHz	Intel® Xeon E3 Quad Core 3.2GHz	Intel® Core i3 Dual Core or Intel® Xeon E3 Quad Core	Intel® Core i3 Dual Core or Intel® Xeon E3 Quad Core
System Memory	DDR3 4GB	DDR3 4GB	DDR3 4GB	DDR3 4GB	DDR3 16GB	DDR3 16GB	DDR3 16GB	DDR3 8GB (up to 32GB)	DDR3 8GB (up to 32GB)
Video Intelligence	Max. 32ch	Max. 32ch	Max. 32ch	Max. 32ch	Max. 32ch	Max. 32ch	Max. 32ch	Based on VMS	Based on VMS
Local Live View					V	V	V		
Video Output	1x VGA	1x VGA	1x VGA	1x VGA	1x VGA, 2x HDMI	1x VGA, 2x HDMI	1x VGA, 2x HDMI	1x VGA, 2x HDMI	1x VGA, 2x HDMI
USB Port	2	2	2	2	4	4	4	4	4
LAN Port	2x Gigabit	2x Gigabit	2x Gigabit	2x Gigabit	2x Gigabit	2x Gigabit	2x Gigabit	4x Gigabit	4x Gigabit
Power Consumption	350W	350W	350W	350W	530W	530W	530W	530W	530W
Redundant Power	V (Storage)	V (Storage)	V (Storage)	V (Storage)	V	V	V	V	V
Chassis	1U 19" Rack	1U 19" Rack	1U 19" Rack	1U 19" Rack	3U 19" Rack	3U 19" Rack	3U 19" Rack	2U 19" Rack	3U 19" Rack
Page	67	67	67	67	68	68	68	69	69

Surveon
Complete Megapixel Solutions

Network Camera

- Full Line of Cameras
- Excellent Image Quality
- Industrial-Grade Design
- 3-Year Warranty



Key Features and Core Technology

3 Megapixel Real-time Performance

The real-time performance (30 frames per second) is the CCTV industry standard. Conventional IP cameras up to 2 megapixel can offer 30 FPS while cameras with a higher resolution can only reach the max. 20 FPS. Surveon has adapted the real-time frame rate in its 3 megapixel (2048 x 1536) cameras, providing 30 FPS and the 1.5-time larger monitoring range than Full HD cameras.



2 MP @ 30 FPS: 2 Lanes



3 MP @ 30 FPS: 3 Lanes

High Dynamic Range (HDR)

HDR compensates for any lost details by taking multiple pictures at different exposure levels and integrates them to one image with balanced lighting, offering clear images at their true colors regardless of the ambient lighting. Surveon's HDR-based sensors with 100dB+ can produce realistic images with wider monitoring areas (3MP@30 FPS or 2MP@50 FPS) even under complicated lighting conditions.



Conventional



Surveon

Region of Interest (ROI)

Surveon's ROI allows images to be compressed to the suitable quality with the lower bit rate. You can assign up to 8 regions with different configurations of image quality and bit rate - a higher bit rate for the important area and a lower one for the less important section, saving bandwidth and storage.



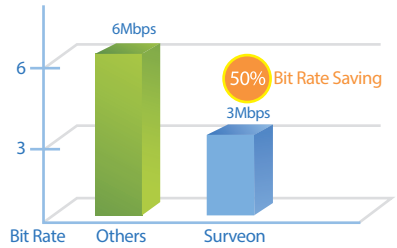

Scalable Video Coding (SVC)

SVC is an extension of the H.264 (MPEG-4 AVC) video compression standard. Surveon's SVC provides a highly efficient streaming to undertake various network environments by adapting different layers of video quality and frame rates in one stream. The receiving port can extract the required streaming layers based on the network connection status and ensure the streaming is real-time and complete.

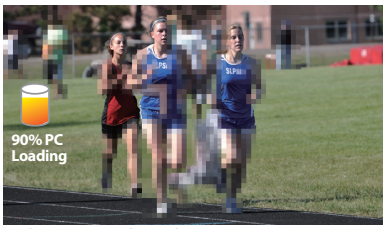

Without SVC: High Load



SVC: High Load

Low Light Performance

With the advanced image processing technology, such as HDR, luminance control, 2D/3D de-noise, edge enhancement, and slow shutter, Surveon megapixel cameras can adapt any complicated lighting environments and low light conditions to deliver clear visibility with detailed features, reducing the need for additional lighting and saving costs of electricity and maintenance.



Conventional

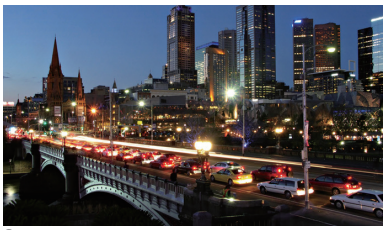

Surveon

Lowest Bit Rate

With Surveon's H.264 high profile encoding technology, you can achieve higher image quality with a relatively low bit rate in comparison with the conventional IP cameras. Along with Surveon's ROI, the encoding performance can be further enhanced up to 30%.



Conventional: H.264 2Mbps

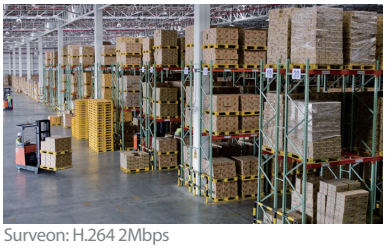

Surveon: H.264 2Mbps

Key Features and Core Technology

Advanced IRIS Control

Iris control adjusts different luminations and diverse depth of fields for 24/7 recording. Surveon's advanced iris control and in-house developed P-iris exceed the limitations of DC-iris in conventional cameras, providing the excellent balance between focus, lumination and depth of fields.


Conventional


Surveon

Auto Focus

Megapixel cameras require the absolute accuracy of lens focus for high resolution images, a requirement hard for the common megapixel solutions to meet. Surveon's auto focus technology, calculating the foreground of the picture and one-push auto focus, ensures clarity and depth of view of the image and reduces the effort during installation and maintenance.

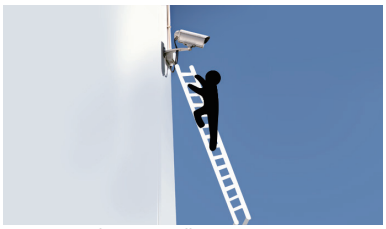
Conventional: Fix Manually

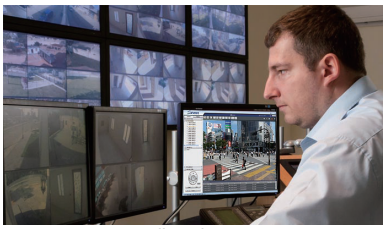
Surveon: Automatically with Auto Focus

360° Panorama View

While it takes two or three dome cameras to capture the entire surrounding view, with one Surveon 360° view fisheye megapixel camera, you can monitor all angles of the location. The distorted hemispherical image of the fisheye camera converts into the conventional rectilinear projection automatically. Using the fisheye cameras, you can deploy fewer cameras but get more coverage.


Surround View

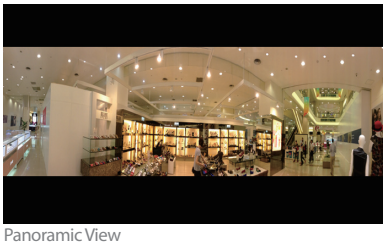
Panoramic View

Object Counting

After setting a line, direction and the object size, cameras will count the numbers when people or things cross the line. This can be utilized in places where managing the space and counting the flow are needed, for example parking lots and shopping malls.



Motion Direction Detection

This functionality is to detect directions other than the configured one (within the limits of the acceptance angle); any wrong direction will trigger alarm. It can be employed for places where only one direction is allowed, for example parking lots.



Offline Recording

Surveon cameras are equipped with the microSD cards and the offline recording capability which can automatically store the video to the microSD card during network downtime. When the network is recovered, the video is resent to the NVR with no data loss.

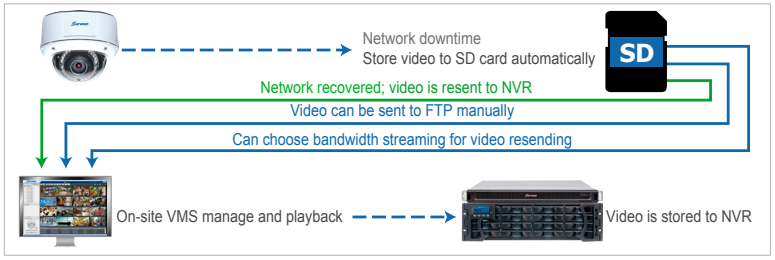

CAM1200/1201

Megapixel Compact Network Camera





Features

- Megapixel Progressive Scan CMOS Sensor
- Up to 1280 x 800 Video Resolution
- H.264/MJPEG 2 Simultaneous Video Streams
- Support Surveon Video Intelligence
- Power over Ethernet (IEEE 802.3af)
- Day/Night Function with IR-Cut Filter (CAM1201)
- Support Wireless Connection

Mechanical Drawing

Unit:mm(inches)

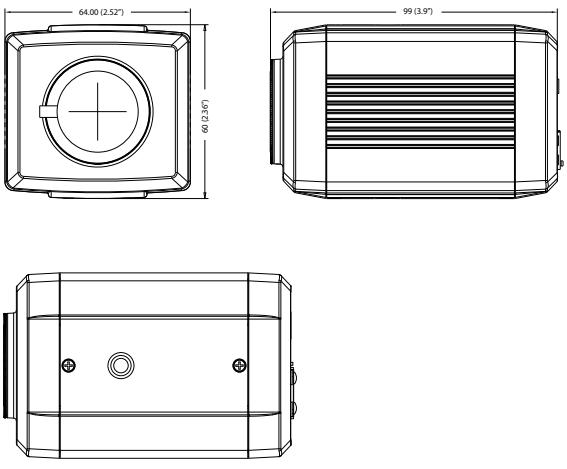

Technical Specifications

Model		CAM1200	CAM1201
Camera	Image Sensor	1/4" megapixel progressive scan CMOS	
	Lens	Changeable (CS/C mount)	
	SNR	48dB	
	WDR	Yes	
	Day/Night ICR	N/A	Yes
	IR LED	N/A	
	Min Illumination	0.01 Lux @ F1.2 (B/W) / 0.1 Lux @ F1.2 (Color)	
	Iris Control	Fixed	
	Shutter Time	1/2 ~ 1/50,000 s	
	Viewing Angle	N/A	
	Camera Angle Adjustment	N/A	
	Pan/Tilt/Zoom Functionalities	N/A	
Video	Video Compression	H.264/MJPEG	
	Resolution	Up to 1280 x 800	
	Frame Rate	30 fps at WXGA (1280 x 800) 30 fps at HD720 (1280 x 720) 30 fps at D1 (720 x 480) 30 fps at VGA (640 x 480) 30 fps at QVGA (320 x 240)	
	Video Stream	Dual stream at H.264 and MJPEG simultaneously	
	Bit Rate	32K ~ 10Mbps, VBR, CBR, controller frame rate and quality	
	Video Control	AGC (Auto Gain Control), AWB (Auto White Balance), AES (Auto Electronic Shutter), image adjustment	
	Intelligent Video	Motion detection, tampering detection (blocked, redirected, defocused, or spray-painted)	
	Video Jack	N/A	
Audio	Built-in MIC	N/A	
	Audio Compression	16KHz, ADPCM/G.711	
	Audio Input/Output	3.5mm phone jack	
I/O and Event Management	Alarm In	N/A	
	Alarm Out	N/A	
	Video Buffer	5 second pre-alarm, 5 second post-alarm	
	Event Action	Send snapshot or video clip by FTP or email, record to NAS, trigger DO	
Network	Supported Protocols	IPv4, IPv6, ARP, TCP, UDP, ICMP, IGMP, DHCP, NTP, DDNS, SMTP, FTP, HTTP, HTTPS, CIFS, PPPoE, UPnP, RTP, RTSP, RTCP, 3GPP, ONVIF, iSCSI	
	Ethernet	10/100 Base-T / RJ45	
System	Local Storage	N/A	
	RS-485	N/A	
	USB	USB 2.0 x 1 for Wireless	
	SDK	Surveon SDK 2.0	
Viewing System	OS	Microsoft Windows XP/Vista/7	
	Browser	IE 8.x or above, Safari, Chrome (via IE Tab)	
	Software	Surveon VMS 2.5	
General	Temperature	Operation: -10°C ~ 50°C (14°F~122°F)	
	Humidity	5 to 90%	
	Power	12VDC 1.5A PoE (IEEE 802.3af) with Class 3	
	Power Consumption	Max. 5W	
	Dimensions	64mm x 60mm x 97mm (2.52" x 2.36" x 3.82")	
	Weight	Net: 275g / Gross: 530g	
	Certification	Safety: LVD / EMC: FCC, CE	
	Warranty	3 years	

CAM1320S2

2 Megapixel Compact Fixed Dome Network Camera





Features

- Megapixel Progressive Scan CMOS Sensor
- Up to 1920 x 1080 Video Resolution
- H.264/MPEG4/MJPEG 2 Simultaneous Video Streams
- Surveon Video Intelligent Ready
- Advanced ISP Function (WDR, ROI, 2D/3D De-noise, Edge Enhancement)
- Power over Ethernet (IEEE 802.3af)

Mechanical Drawing

Unit:mm(inches)

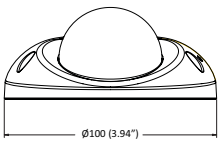

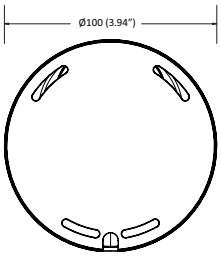

Technical Specifications

Model		CAM1320S2
Camera	Image Sensor	1/3" megapixel progressive scan CMOS
	Lens	f2.8mm, F1.8
	SNR	48dB
	WDR	Yes
	Day/Night ICR	N/A
	IR LED	N/A
	Min Illumination	0.01 Lux @ F1.8 (B/W) 0.1 Lux @ F1.8 (Color)
	Iris Control	Fixed
	Shutter Time	1/1 ~ 1/10,000 s
	Viewing Angle	DIAGONAL: 128° HORIZONTAL: 98° VERTICAL: 81°
	Camera Angle Adjustment	N/A
	Pan/Tilt/Zoom Functionalities	N/A
Video	Video Compression	H.264/MPEG-4/MJPEG
	Resolution	Up to 1920 x 1080
	Frame Rate	30 fps at 1080P (1920 x 1080) 30 fps at SXGA (1280 x 1024) 30 fps at HD720 (1280 x 720) 30 fps at D1 (720 x 480) 30 fps at VGA (640 x 480) 30 fps at QVGA (320 x 240)
	Video Stream	Dual stream at H.264, MPEG-4, and MJPEG simultaneously
	Bit Rate	32K ~ 10Mbps, VBR, CBR, controller frame rate and quality
	Video Control	AGC (Auto Gain Control), AWB (Auto White Balance), AES (Auto Electronic Shutter), WDR, 2D/3D De-noise, ROI, Edge Enhancement, image adjustment
	Intelligent Video	Motion detection, tampering detection (blocked, redirected, defocused, or spray-painted)
	Video Jack	N/A
Audio	Built-in MIC	Yes
	Audio Compression	16KHz, ADPCM/G.711
	Audio Input/Output	N/A
I/O and Event Management	Alarm In	N/A
	Alarm Out	N/A
	Video Buffer	5 second pre-alarm, 5 second post-alarm
	Event Action	Send snapshot or video clip by FTP or email, record to NAS
Network	Supported Protocols	IPv4, IPv6, ARP, TCP, UDP, ICMP, IGMP, DHCP, NTP, DDNS, SMTP, FTP, HTTP, HTTPS, CIFS, PPPoE, UPnP, RTP, RTSP, RTCP, 3GPP, ONVIF, iSCSI
	Ethernet	10/100 Base-T / RJ45
System	Local Storage	N/A
	RS-485	N/A
	USB	N/A
	SDK	Surveon SDK 2.0
Viewing System	OS	Microsoft Windows XP/Vista/7
	Browser	IE 8.x or above, Safari, Chrome (via IE Tab)
	Software	Surveon VMS 2.5.0
General	Temperature	Operation: -10°C ~ 50°C (14°F~122°F)
	Humidity	5 to 90%
	Power	PoE (IEEE 802.3af) with Class 3
	Power Consumption	Max. 3.2W
	Dimensions	ø100mm x 43mm (H) (3.94"x 1.69")
	Weight	Net: 190g Gross: 305g
	Certification	Safety: LVD EMC: FCC, CE
	Warranty	3 years

CAM1420S2

3 Megapixel Compact Fixed Dome Network Camera





Features

- Megapixel Progressive Scan CMOS Sensor
- Up to 2048 x 1536 Video Resolution
- H.264/MPEG4/MJPEG 2 Simultaneous Video Streams
- Surveon Video Intelligent Ready
- Advanced ISP Function (WDR, ROI, 2D/3D De-noise, Edge Enhancement)
- Power over Ethernet (IEEE 802.3af)

Mechanical Drawing

Unit:mm(inches)

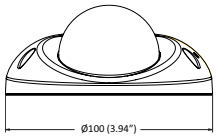

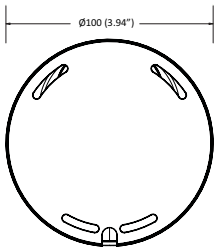

Technical Specifications

Model		CAM1420S2
Camera	Image Sensor	1/3" megapixel progressive scan CMOS
	Lens	f2.8mm, F1.8
	SNR	48dB
	WDR	Yes
	Day/Night ICR	N/A
	IR LED	N/A
	Min Illumination	0.01 Lux @ F1.8 (B/W) 0.1 Lux @ F1.8 (Color)
	Iris Control	Fixed
	Shutter Time	1/1 ~ 1/10,000 s
	Viewing Angle	DIAGONAL: 128° HORIZONTAL: 98° VERTICAL: 81°
	Camera Angle Adjustment	N/A
	Pan/Tilt/Zoom Functionalities	N/A
Video	Video Compression	H.264/MPEG-4/MJPEG
	Resolution	Up to 2048 x 1536
	Frame Rate	25 fps at QXGA (2048 x 1536) 30 fps at 1080P (1920 x 1080) 30 fps at SXGA (1280 x 1024) 30 fps at HD720 (1280 x 720) 30 fps at D1 (720 x 480) 30 fps at VGA (640 x 480) 30 fps at QVGA (320 x 240)
	Video Stream	Dual stream at H.264, MPEG-4, and MJPEG simultaneously
	Bit Rate	32K ~ 10Mbps, VBR, CBR, controller frame rate and quality
	Video Control	AGC (Auto Gain Control), AWB (Auto White Balance), AES (Auto Electronic Shutter), WDR, 2D/3D De-noise, ROI, Edge Enhancement, image adjustment
	Intelligent Video	Motion detection, tampering detection (blocked, redirected, defocused, or spray-painted)
	Video Jack	N/A
Audio	Built-in MIC	Yes
	Audio Compression	16KHz, ADPCM/G.711
	Audio Input/Output	N/A
I/O and Event Management	Alarm In	N/A
	Alarm Out	N/A
	Video Buffer	5 second pre-alarm, 5 second post-alarm
	Event Action	Send snapshot or video clip by FTP or email, record to NAS
Network	Supported Protocols	IPv4, IPv6, ARP, TCP, UDP, ICMP, IGMP, DHCP, NTP, DDNS, SMTP, FTP, HTTP, HTTPS, CIFS, PPPoE, UPnP, RTP, RTSP, RTCP, 3GPP, ONVIF, iSCSI
	Ethernet	10/100 Base-T / RJ45
System	Local Storage	N/A
	RS-485	N/A
	USB	N/A
	SDK	Surveon SDK 2.0
Viewing System	OS	Microsoft Windows XP/Vista/7
	Browser	IE 8.x or above, Safari, Chrome (via IE Tab)
	Software	Surveon VMS 2.5.0
General	Temperature	Operation: -10°C ~ 50°C (14°F~122°F)
	Humidity	5 to 90%
	Power	PoE (IEEE 802.3af) with Class 3
	Power Consumption	Max. 3.2W
	Dimensions	ø100mm x 43mm (H) (3.94"x 1.69")
	Weight	Net: 190g Gross: 305g
	Certification	Safety: LVD EMC: FCC, CE
	Warranty	3 years

CAM2311SC

2 Megapixel Day&Night Compact Network Camera



Exmor™ CMOS Sensor

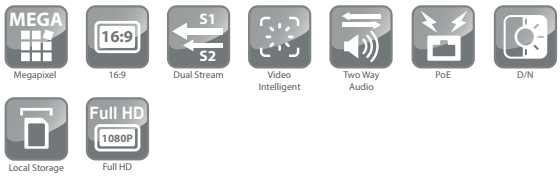

Features

- 2 Megapixel Progressive Scan CMOS Sensor
- Up to 1920 x 1080 Video Resolution
- H.264/MJPEG 2 Simultaneous Video Streams
- Surveon Video Intelligent Ready
- Advanced ISP Function (WDR, ROI, Luminance Control, 2D/3D De-noise, Edge Enhancement, Lens Correction)
- Day/Night Function with IR-Cut Filter
- Power over Ethernet (IEEE 802.3af)

Mechanical Drawing

Unit:mm(inches)

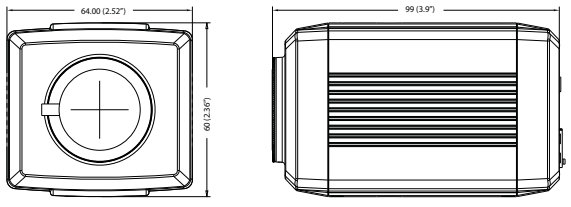

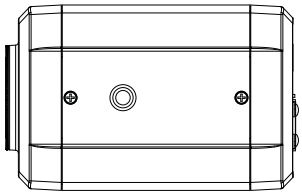

Technical Specifications

Model		CAM2311SC
Camera	Image Sensor	1/2.9 " 2 megapixel SONY Exmor CMOS
	Lens	Changeable (CS/C mount)
	SNR	48dB
	WDR	Yes
	Day/Night ICR	Yes
	IR LED	N/A
	Min Illumination	0.01 Lux @ F1.2 (B/W) 0.1 Lux @ F1.2 (Color)
	Iris Control	DC drive
	Shutter Time	1/1 ~ 1/1,000,000 s
	Viewing Angle	N/A
	Camera Angle Adjustment	N/A
	Pan/Tilt/Zoom Functionalities	N/A
Video	Video Compression	H.264/MPEG-4/MJPEG
	Resolution	Up to 1920 x 1080
	Frame Rate	30 fps at 1080P (1920 x 1080) 30 fps at SXGA (1280 x 1024) 30 fps at HD720 (1280 x 720) 30 fps at D1 (720 x 480) 30 fps at VGA (640 x 480) 30 fps at QVGA (320 x 240)
	Video Stream	Dual stream at H.264, MPEG-4, and MJPEG simultaneously
	Bit Rate	32K ~ 10Mbps, VBR, CBR, controller frame rate and quality
	Video Control	AGC (Auto Gain Control), AWB (Auto White Balance), AES (Auto Electronic Shutter), Luminance Control, WDR, 2D/3D De-noise, ROI, Edge Enhancement, Lens Correction, image adjustment
	Intelligent Video	Motion detection, tampering detection (blocked, redirected, defocused, or spray-painted)
	Video Jack	N/A
Audio	Built-in MIC	N/A
	Audio Compression	16KHz, ADPCM/G.711
	Audio Input/Output	3.5mm phone jack
I/O and Event Management	Alarm In	1, terminal block
	Alarm Out	1, terminal block
	Video Buffer	5 second pre-alarm, 30 second post-alarm
	Event Action	Send snapshot or video clip by FTP or email, record to NAS, trigger DO
Network	Supported Protocols	IPv4, ARP, TCP, UDP, ICMP, IGMP, DHCP, NTP, DDNS, SMTP, FTP, HTTP, CIFS, PPPoE, UPnP, RTP, RTSP, RTCP, 3GPP, ONVIF, iSCSI
	Ethernet	10/100 Base-T / RJ45
System	Local Storage	microSD/SDHC x 1(Class 4/Class 6 only)
	RS-485	N/A
	USB	N/A
	SDK	Surveon SDK 2.0
Viewing System	OS	Microsoft Windows XP/Vista/7
	Browser	IE 8.x or above, Safari, Chrome (via IE Tab)
	Software	Surveon VMS 2.5
General	Temperature	Operation: -10°C ~ 50°C (14°F~122°F)
	Humidity	5 to 90%
	Power	PoE (IEEE 802.3af) with Class 3
	Power Consumption	Max. 5W
	Dimensions	64mm x 60mm x 97mm(2.52" x 2.36" x 3.82")
	Weight	Net: 275g / Gross: 530g
	Certification	Safety: LVD / EMC: FCC, CE
	Warranty	3 years

CAM2511SC

5 Megapixel Day&Night Compact Network Camera



Exmor™ CMOS Sensor

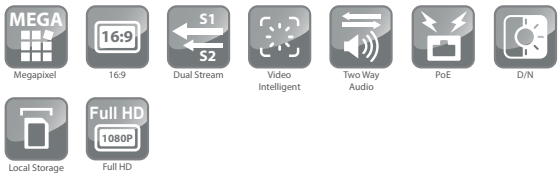

Features

- Megapixel Progressive Scan Sensor
- Up to 2560 x 1920 Video Resolution
- H.264/MJPEG 2 Simultaneous Video Streams
- Support Surveon Video Intelligence
- Advanced ISP Function (WDR, ROI, Luminance Control, 2D/3D De-noise, Edge Enhancement, Lens Correction)
- Day/Night Function with IR-Cut Filter
- Power over Ethernet (IEEE 802.3af)

Mechanical Drawing

Unit:mm(inches)

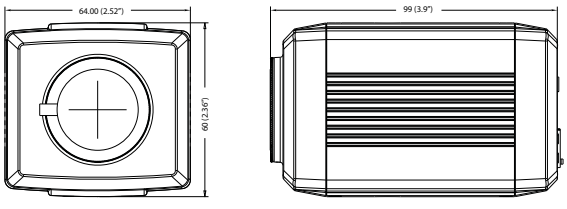

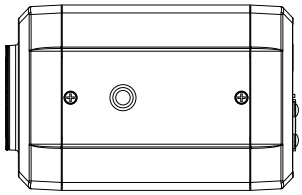

Technical Specifications

Model		CAM2511SC
Camera	Image Sensor	1/2.5" megapixel progressive scan CMOS
	Lens	Changeable (CS/C mount)
	SNR	48dB
	WDR	Yes
	Day/Night ICR	Yes
	IR LED	N/A
	Min Illumination	0.01 Lux @ F1.2 (B/W) 0.1 Lux @ F1.2 (Color)
	Iris Control	DC drive
	Shutter Time	1/1 ~ 1/1,000,000 s
	Viewing Angle	N/A
	Camera Angle Adjustment	N/A
	Pan/Tilt/Zoom Functionalities	N/A
Video	Video Compression	H.264/MPEG-4/MJPEG
	Resolution	Up to 2560 x 1920
	Frame Rate	12 fps at QSXGA (2560 x 1920) 20 fps at QXGA (2048 x 1536) 30 fps at 1080P (1920 x 1080) 30 fps at SXGA (1280 x 1024) 30 fps at 720P (1280 x 720) 30 fps at D1 (720 x 480) 30 fps at VGA (640 x 480) 30 fps at QVGA (320 x 240)
	Video Stream	Dual stream at H.264, MPEG-4, and MJPEG simultaneously
	Bit Rate	32K ~ 10Mbps, VBR, CBR, controller frame rate and quality
	Video Control	AGC (Auto Gain Control), AWB (Auto White Balance), AES (Auto Electronic Shutter), Luminance Control, WDR, 2D/3D De-noise, ROI, Edge Enhancement, Lens Correction, image adjustment
	Intelligent Video	Motion detection, tampering detection (blocked, redirected, defocused, or spray-painted)
	Video Jack	N/A
Audio	Built-in MIC	N/A
	Audio Compression	16KHz, ADPCM/G.711
	Audio Input/Output	3.5mm phone jack
I/O and Event Management	Alarm In	1, terminal block
	Alarm Out	1, terminal block
	Video Buffer	5 second pre-alarm, 30 second post-alarm
	Event Action	Send snapshot or video clip by FTP or email, record to NAS, trigger DO
Network	Supported Protocols	IPv4, IPv6, ARP, TCP, UDP, ICMP, IGMP, DHCP, NTP, DDNS, SMTP, SNMP, FTP, HTTP, HTTPS, CIFS, PPPoE, UPnP, RTP, RTSP, RTCP, 3GPP, ONVIF, iSCSI
	Ethernet	10/100 Base-T / RJ45
System	Local Storage	microSD/SDHC x 1 (Class 4/Class 6 only)
	RS-485	N/A
	USB	N/A
	SDK	Surveon SDK 2.0
Viewing System	OS	Microsoft Windows XP/Vista/7
	Browser	IE 8.x or above, Safari, Chrome (via IE Tab)
	Software	Surveon VMS 2.5
General	Temperature	Operation: -10°C ~ 50°C (14°F~122°F)
	Humidity	5 to 90%
	Power	PoE (IEEE 802.3af) with Class 3
	Power Consumption	Max. 5W
	Dimensions	64mm x 60mm x 97mm (2.52" x 2.36" x 3.82")
	Weight	Net: 275g / Gross: 530g
	Certification	Safety: LVD / EMC: FCC, CE
	Warranty	3 years

CAM2331SC/SP

2 Megapixel Day&Night Low Light Network Camera



Piris

Exmor™ CMOS Sensor

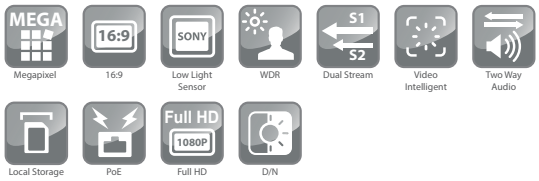

Features

- Megapixel SONY Exmor Sensor
- Full HD & Real Time Network Camera
- Up to 1920 x 1080 Video Resolution
- H.264/MPEG4/MJPEG 2 Simultaneous Video Streams
- Support Surveon Video Intelligence
- MicroSD/SDHC Local Storage for Alarm Capture
- Power over Ethernet (IEEE 802.3af)
- Day/Night Function with IR-Cut Filter
- Advanced ISP Function (WDR, ROI, Luminance Control, 2D/3D De-noise, Edge Enhancement, Lens Correction)

Mechanical Drawing

Unit:mm(inches)

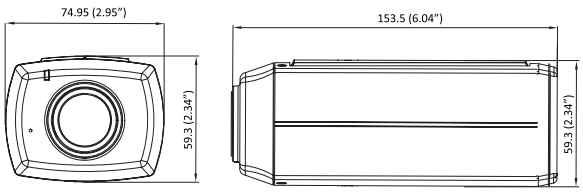

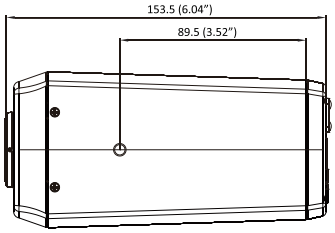

Technical Specifications

Model		CAM2331SC	CAM2331SP
Camera	Image Sensor	1/2.9" megapixel SONY Exmor CMOS	
	Lens	Changeable (CS/C mount)	3-10.5mm P-Iris Lens, F1.4 (CS mount)
	SNR	50dB	
	WDR	Yes	
	Day/Night ICR	Yes	
	IR LED	N/A	
	Min Illumination	0.005 Lux @ F1.2 (B/W) / 0.05 Lux @ F1.2 (Color)	
	Iris Control	DC drive	P-Iris
	Shutter Time	1/1 ~ 1/1,000,000 s	
	Viewing Angle	Horizontal: 100°- 30°	
	Camera Angle Adjustment	N/A	
	Pan/Tilt/Zoom Functionalities	N/A	
Video	Video Compression	H.264/MPEG-4/MJPEG	
	Resolution	Up to 1920 x 1080	
	Frame Rate	30 fps at 1080P (1920 x 1080) 30 fps at SXGA (1280 x 1024) 30 fps at HD720 (1280 x 720) 30 fps at D1 (720 x 480) 30 fps at VGA (640 x 480) 30 fps at QVGA (320 x 240)	
	Video Stream	Dual stream at H.264, MPEG-4, and MJPEG simultaneously	
	Bit Rate	32K ~ 10Mbps, VBR, CBR, controller frame rate and quality	
	Video Control	AGC (Auto Gain Control), AWB (Auto White Balance), AES (Auto Electronic Shutter), Luminance Control, WDR, 2D/3D De-noise, ROI, Edge Enhancement, Lens Correction, image adjustment	
	Intelligent Video	Motion detection, tampering detection (blocked, redirected, defocused, or spray-painted)	
	Video Jack	Yes (BNC)	
Audio	Built-in MIC	N/A	
	Audio Compression	16KHz, ADPCM/G.711	
	Audio Input/Output	3.5mm phone jack	
I/O and Event Management	Alarm In	1, terminal block	
	Alarm Out	1, terminal block	
	Video Buffer	5 second pre-alarm, 30 second post-alarm	
	Event Action	Send snapshot or video clip by FTP or email, record to NAS, record to local storage, trigger DO	
Network	Supported Protocols	IPv4, IPv6, ARP, TCP, UDP, ICMP, IGMP, DHCP, NTP, DDNS, SMTP, SNMP, FTP, HTTP, HTTPS, CIFS, PPPoE, UPnP, RTP, RTSP, RTCP, 3GPP, ONVIF, iSCSI	
	Ethernet	10/100 Base-T / RJ45	
System	Local Storage	microSD/SDHC x 1	
	RS-485	1 (2 pin on terminal block)	
	USB	N/A	
	SDK	Surveon SDK 2.0	
Viewing System	OS	Microsoft Windows XP/Vista/7	
	Browser	IE 8.x or above, Safari, Chrome (via IE Tab)	
	Software	Surveon VMS 2.5	
General	Temperature	Operation: -10°C~ 50°C (14°F~122°F)	
	Humidity	5 to 90%	
	Power	12VDC 1.5A PoE (IEEE 802.3af) with Class 3	
	Power Consumption	Max. 7W	
	Dimensions	74.95mm x 59.3mm x 153.5mm (2.95" x 2.34" x 6.04")	
	Weight	Net: 435g (0.96 lb) / Gross: 1085g (2.4 lb)	
	Certification	Safety: LVD / EMC: FCC, CE	
	Warranty	3 years	

CAM2441SC

3 Megapixel HDR Day&Night Box Network Camera



HDR

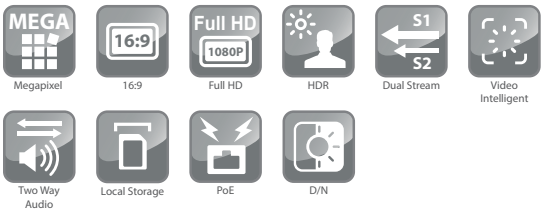

Features

- Megapixel Progressive Scan HDR Sensor
- Up to 2048x1536 30PFS & 1920x1080 60FPS
- H.264/MPEG4/MJPEG 2 Simultaneous Video Streams
- Support Surveon Video Intelligence
- MicroSD/SDHC Local Storage for Alarm Capture
- Advanced ISP Function (Smart HDR, Smart 2D/3D De-noise, Edge Enhancement)
- HDR (High Wide Dynamic Range) and ROI (Video Cropping)
- PoE (IEEE 802.3af) and Day/Night IR-Cut Filter
- Day/Night profiles for optical settings

Mechanical Drawing

Unit:mm(inches)

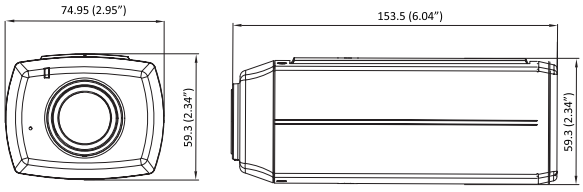

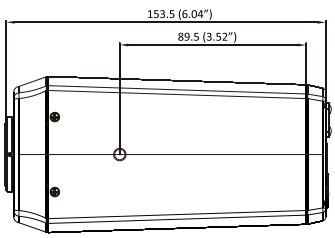

Technical Specifications

Model		CAM2441SC
Camera	Image Sensor	1/3" megapixel progressive scan CMOS
	Lens	Changeable (CS/C mount)
	SNR	50dB
	WDR	Yes (HDR, 120 dB)
	Day/Night ICR	Yes
	IR LED	N/A
	Min Illumination	0.01 Lux @ F1.2 (B/W) 0.1 Lux @ F1.2 (Color)
	Iris Control	DC drive
	Shutter Time	1/1 ~ 1/10,000 s
	Viewing Angle	N/A
	Camera Angle Adjustment	N/A
	Pan/Tilt/Zoom Functionalities	N/A
Video	Video Compression	H.264/MPEG-4/MJPEG
	Resolution	Up to 2048 x 1536
	Frame Rate	30 fps at QXGA (2048 x 1536) 60 fps at 1080P (1920 x 1080) 60 fps at SXGA (1280 x 1024) 60 fps at 720P (1280 x 720) 60 fps at D1 (720 x 480) 60 fps at VGA (640 x 480) 60 fps at QVGA (320 x 240)
	Video Stream	Dual stream at H.264, MPEG-4, and MJPEG simultaneously
	Bit Rate	32K ~ 20Mbps, VBR, CBR, controller frame rate and quality
	Video Control	AGC (Auto Gain Control), AWB (Auto White Balance), AES (Auto Electronic Shutter), BLC (Back Light Compensation), HDR, 2D/3D De-noise, ROI, Edge Enhancement, image adjustment
	Intelligent Video	Motion detection, tampering detection (blocked, redirected, defocused, or spray-painted)
	Video Jack	Yes (BNC)
Audio	Built-in MIC	N/A
	Audio Compression	16KHz, ADPCM/G.711
	Audio Input/Output	3.5mm phone jack
I/O and Event Management	Alarm In	1, terminal block
	Alarm Out	1, terminal block
	Video Buffer	5 second pre-alarm, 30 second post-alarm
	Event Action	Send snapshot or video clip by FTP or email, record to NAS, record to local storage, trigger DO
Network	Supported Protocols	IPv4, IPv6, ARP, TCP, UDP, ICMP, IGMP, DHCP, NTP, DDNS, SMTP, SNMP, FTP, HTTP, HTTPS, CIFS, PPPoE, UPnP, RTP, RTSP, RTCP, 3GPP, ONVIF, iSCSI
	Ethernet	10/100 Base-T / RJ45
System	Local Storage	microSD/SDHC x 1
	RS-485	1 (2 pin on terminal block)
	USB	N/A
	SDK	Surveon SDK 2.0
Viewing System	OS	Microsoft Windows 7/8
	Browser	IE 8.x or above, Safari, Chrome (via IE Tab)
	Software	Surveon VMS 2.5
General	Temperature	Operation: -10°C~ 50°C (14°F~122°F)
	Humidity	5 to 90%
	Power	12VDC 1.5A;PoE (IEEE 802.3af) with Class 3
	Power Consumption	Max. 8.5W
	Dimensions	74.95mm x 59.3mm x 153.5mm (2.95" x 2.34" x 6.04")
	Weight	Net: 435g (0.96 lb) / Gross: 1085g (2.4 lb)
	Certification	Safety: LVD / EMC: FCC, CE
	Warranty	3 years

CAM2441HI

3 Megapixel Video Analytics Day&Night Box Network Camera



HDR

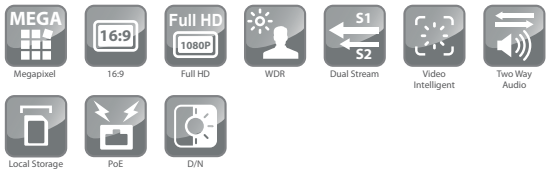

Features

- Megapixel Progressive Scan HDR Sensor
- Up to 2048x1536 30FPS & 1920x1080 60FPS
- H.264/MPEG4/MJPEG 2 Simultaneous Video Streams
- Advanced Video Analytics (Optical Diagnosis, Object Loitering Detection, Motion Direction Detection, Entering/Leaving Detection, Object Counting)
- Advanced ISP Function (HDR, ROI, 2D/3D De-noise, Edge Enhancement)
- MicroSD/SDHC Local Storage for Alarm Capture
- PoE (IEEE 802.3af) and Day/Night IR-Cut Filter
- Day/Night profiles for optical settings

Mechanical Drawing

Unit:mm(inches)

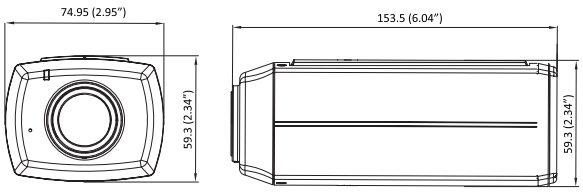

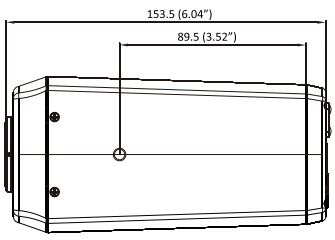

Technical Specifications

Model		CAM2441HI
Camera	Image Sensor	1/3" megapixel progressive scan CMOS
	Lens	Changeable (CS/C mount)
	SNR	50dB
	WDR	Yes (HDR, 120 dB)
	Day/Night ICR	Yes
	IR LED	N/A
	Min Illumination	0.01 Lux @ F1.2 (B/W), 0.1 Lux @ F1.2 (Color)
	Iris Control	DC drive
	Shutter Time	1/1 ~ 1/10,000 s
	Viewing Angle	N/A
	Camera Angle Adjustment	N/A
	Pan/Tilt/Zoom Functionalities	N/A
Video	Video Compression	H.264/MPEG-4/MJPEG
	Resolution	Up to 2048 x 1536
	Frame Rate	30 fps at QXGA (2048 x 1536) 60 fps at 1080P (1920 x 1080) 60 fps at SXGA (1280 x 1024) 60 fps at 720P (1280 x 720) 60 fps at D1 (720 x 480) 60 fps at VGA (640 x 480) 60 fps at QVGA (320 x 240)
	Video Stream	Dual stream at H.264, MPEG-4, and MJPEG simultaneously
	Bit Rate	32K ~ 20Mbps, VBR, CBR, controller frame rate and quality
	Video Control	AGC (Auto Gain Control), AWB (Auto White Balance), AES (Auto Electronic Shutter), BLC (Back Light Compensation), HDR, 2D/3D De-noise, ROI, Edge Enhancement, image adjustment
	Intelligent Video	Motion detection, tampering detection (blocked, redirected, defocused, or spray-painted)
	Video Analytics	Optical Diagnosis, Object Loitering Detection, Object Motion Direction Detection, Area - Entering or Leaving Detection, Object Counting by Wire (directional) or Area (in/out)
	Video Jack	N/A
Audio	Built-in MIC	N/A
	Audio Compression	16KHz, ADPCM/G.711
	Audio Input/Output	3.5mm phone jack
I/O and Event Management	Alarm In	1, terminal block
	Alarm Out	1, terminal block
	Video Buffer	5 second pre-alarm, 30 second post-alarm
	Event Action	Send snapshot or video clip by FTP or email, record to NAS, record to local storage, trigger DO
Network	Supported Protocols	IPv4, IPv6, ARP, TCP, UDP, ICMP, IGMP, DHCP, NTP, DDNS, SMTP, SNMP, FTP, HTTP, HTTPS, CIFS, PPPoE, UPnP, RTP, RTSP, RTCP, 3GPP, ONVIF, iSCSI
	Ethernet	10/100 Base-T / RJ45
System	Local Storage	microSD/SDHC x 1
	RS-485	1 (2 pin on terminal block)
	USB	N/A
	SDK	Surveon SDK 2.0
Viewing System	OS	Microsoft Windows 7/8
	Browser	IE 8.x or above, Safari, Chrome (via IE Tab)
	Software	Surveon VMS 2.5
General	Temperature	Operation: -10°C~ 50°C (14°F~122°F)
	Humidity	5 to 90%
	Power	12VDC 1.5A; PoE (IEEE 802.3af) with Class 3
	Power Consumption	Max. 8.5W
	Dimensions	74.95mm x 59.3mm x 153.5mm (2.95" x 2.34" x 6.04")
	Weight	Net: 435g (0.96 lb) Gross: 1085g (2.4 lb)
	Certification	Safety: LVD, EMC: FCC, CE
	Warranty	3 years

CAM2511

5 Megapixel WDR Day&Night Box Network Camera



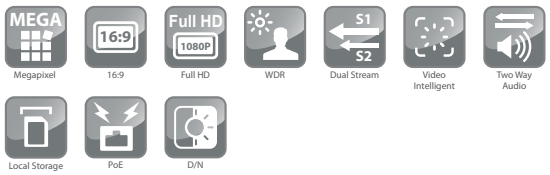

Features

- Megapixel Progressive Scan CMOS Sensor
- Up to 2560 x 1920 Video Resolution
- H.264/MPEG4/MJPEG 2 Simultaneous Video Streams
- Surveon Video Intelligent Ready
- MicroSD/SDHC Local Storage for Alarm Capture
- Advanced ISP Function (WDR, ROI, Luminance Control, 2D/3D De-noise, Edge Enhancement, Lens Correction)
- PoE (IEEE 802.3af) and Day/Night IR-Cut Filter
- Day/Night profiles for optical settings

Mechanical Drawing

Unit:mm(inches)

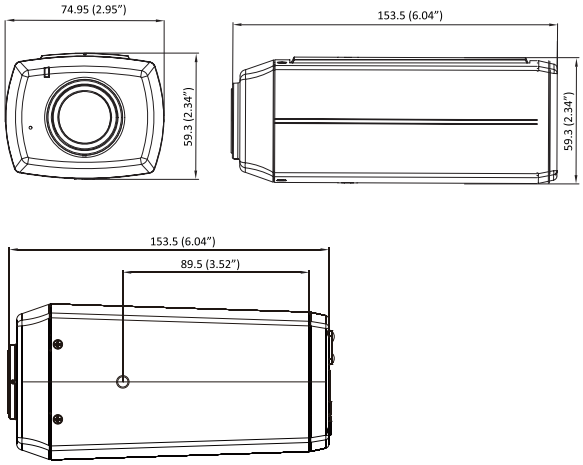

Technical Specifications

Model		CAM2511
Camera	Image Sensor	1/2.5" 5 megapixel progressive scan CMOS
	Lens	Changeable (CS/C mount)
	SNR	48dB
	WDR	Yes
	Day/Night ICR	Yes
	IR LED	N/A
	Min Illumination	0.01 Lux @ F1.2 (B/W) / 0.1 Lux @ F1.2 (Color)
	Iris Control	DC drive
	Shutter Time	1/1 ~ 1/1,000,000 s
	Viewing Angle	N/A
	Camera Angle Adjustment	N/A
	Pan/Tilt/Zoom Functionalities	N/A
Video	Video Compression	H.264/MPEG-4/MJPEG
	Resolution	Up to 2560 x 1920
	Frame Rate	14 fps at QSXGA (2560 x 1920) 21 fps at QXGA (2048 x 1536) 30 fps at 1080P (1920 x 1080) 30 fps at SXGA (1280 x 1024) 30 fps at 720P (1280 x 720) 30 fps at D1 (720 x 480) 30 fps at VGA (640 x 480) 30 fps at QVGA (320 x 240)
	Video Stream	Dual stream at H.264, MPEG-4, and MJPEG simulataneously
	Bit Rate	32K ~ 20Mbps, VBR, CBR, controller frame rate and quality
	Video Control	AGC (Auto Gain Control), AWB (Auto White Balance), AES (Auto Electronic Shutter), Luminance Control, WDR, 2D/3D De-noise, ROI, Edge Enhancement, Lens Correction, image adjustment
	Intelligent Video	Motion detection, tampering detection (blocked, redirected, defocused, or spray-painted)
	Video Jack	Yes (BNC)
Audio	Built-in MIC	N/A
	Audio Compression	16KHz, ADPCM/G.711
	Audio Input/Output	3.5mm phone jack
I/O and Event Management	Alarm In	1, terminal block
	Alarm Out	1, terminal block
	Video Buffer	5 second pre-alarm, 30 second post-alarm
	Event Action	Send snapshot or video clip by FTP or email, record to NAS, record to local storage, trigger DO
Network	Supported Protocols	IPv4, ARP, TCP, UDP, ICMP, IGMP, DHCP, NTP, DDNS, SMTP, FTP, HTTP, CIFS, PPPoE, UPnP, RTP, RTSP, RTCP, 3GPP, ONVIF, iSCSI
	Ethernet	10/100 Base-T / RJ45
System	Local Storage	microSD/SDHC x 1 (Class 4/Class 6 only)
	RS-485	1 (2 pin on terminal block)
	USB	N/A
	SDK	Surveon SDK 2.0
Viewing System	OS	Microsoft Windows XP/Vista/7
	Browser	IE 8.x or above, Safari, Chrome (via IE Tab)
	Software	Surveon VMS 2.5
General	Temperature	Operation: -10°C~ 50°C (14°F~122°F) Storage: -30°C ~ 60°C (-22°F~140°F)
	Humidity	5 to 90%
	Power	12VDC 1.5A; PoE (IEEE 802.3af) with Class 3
	Power Consumption	Max. 7W
	Dimensions	74.95mm x 59.3mm x 153.5mm (2.95" x 2.34" x 6.04")
	Weight	Net: 435g (0.96 lb) / Gross: 1085g (2.4 lb)
	Certification	Safety: LVD / EMC: FCC, CE, GOST
	Warranty	3 years

CAM3351R4/R6

2 Megapixel Day&Night Bullet Network Camera



Exmor™ CMOS Sensor



Features

- Megapixel SONY Exmor Sensor
- Up to 1920 x 1080 Video Resolution
- H.264/MPEG4/MJPEG 2 Simultaneous Video Streams
- Surveon Video Intelligent Ready
- MicroSD/SDHC Local Storage for Alarm Capture
- Power over Ethernet (IEEE 802.3af)
- Day/Night Function with IR-Cut Filter
- Advanced ISP Function (WDR, ROI, Luminance Control, 2D/3D De-noise, Edge Enhancement, Lens Correction)
- Built-in IR Illuminators, Effective Up to 20 Meters
- IP66 for Outdoor Application

Mechanical Drawing

Unit:mm(inches)

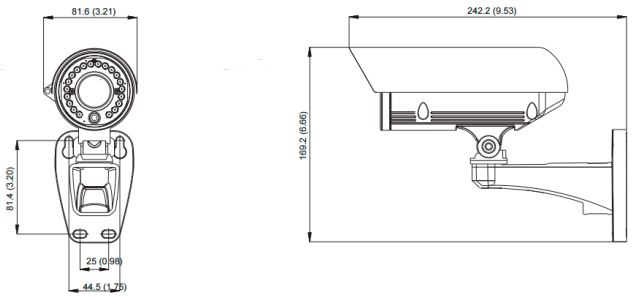

Technical Specifications

Model		CAM3351R4	CAM3351R6
Camera	Image Sensor	1/2.9" megapixel SONY Exmor CMOS	
	Lens	f4.2 mm, F1.8	f6.0 mm, F2.0
	SNR	48dB	
	WDR	Yes	
	Day/Night ICR	Yes	
	IR LED	Yes(20m)	
	Min Illumination	0.01 Lux @ F1.4 (B/W), 0.1 Lux @ F1.4 (Color)	
	Iris Control	Fixed	
	Shutter Time	1/1 ~ 1/1,000,000 s	
	Viewing Angle	Diagonal: 89°, Horizontal: 71°, Vertical: 49.5°	Diagonal: 60.5°, Horizontal: 52.4°, Vertical: 29°
	Camera Angle Adjustment	N/A	
	Pan/Tilt/Zoom Functionalities	N/A	
Video	Video Compression	H.264/MPEG-4/MJPEG	
	Resolution	Up to 1920 x 1080	
	Frame Rate	30 fps at 1080P (1920 x 1080) 30 fps at SXGA (1280 x 1024) 30 fps at HD720 (1280 x 720) 30 fps at D1 (720 x 480) 30 fps at VGA (640 x 480) 30 fps at QVGA (320 x 240)	
	Video Stream	Dual stream at H.264, MPEG-4, and MJPEG simultaneously	
	Bit Rate	32K ~ 10Mbps, VBR, CBR, controller frame rate and quality	
	Video Control	AGC (Auto Gain Control), AWB (Auto White Balance), AES (Auto Electronic Shutter), Luminance Control, WDR, 2D/3D De-noise, ROI, Edge Enhancement, Lens Correction, image adjustment	
	Intelligent Video	Motion detection, tampering detection (blocked, redirected, defocused, or spray-painted)	
	Video Jack	N/A	
Audio	Built-in MIC	N/A	
	Audio Compression	N/A	
	Audio Input/Output	N/A	
I/O and Event Management	Alarm In	N/A	
	Alarm Out	N/A	
	Video Buffer	5 second pre-alarm, 30 second post-alarm	
	Event Action	Send snapshot or video clip by FTP or email, record to NAS, record to local storage, trigger DO	
Network	Supported Protocols	IPv4, IPv6, ARP, TCP, UDP, ICMP, IGMP, DHCP, NTP, DDNS, SMTP, SNMP, FTP, HTTP, HTTPS, CIFS, PPPoE, UPnP, RTP, RTSP, RTCP, 3GPP, ONVIF, iSCSI	
	Ethernet	10/100 Base-T / RJ45	
System	Local Storage	microSD/SDHC x 1	
	RS-485	N/A	
	USB	N/A	
	SDK	Surveon SDK 2.0	
Viewing System	OS	Microsoft Windows XP/Vista/7	
	Browser	IE 8.x or above, Safari, Chrome (via IE Tab)	
	Software	Surveon VMS 2.5	
General	Temperature	Operation: -10°C ~ 50°C (14°F~122°F)	
	Humidity	5 to 90%	
	Power	PoE (IEEE 802.3af) with Class 3	
	Power Consumption	Max. 7.5W (w/o Heater)	
	Dimensions	Length: 165mm, Diameter: 75mm	
	Weight	NET: 600g / With bracket: 800g	
	Certification	Safety: LVD / EMC: FCC, CE, IP66	
	Warranty	3 years	

* CAM3351R4: When under the night mode, the IR reflections may occur in some scenes

CAM3361LV

2 Megapixel Day&Night Bullet Network Camera



Exmor™ CMOS Sensor



Features

- Megapixel SONY Exmor Sensor
- Up to 1920 x 1080 Video Resolution
- H.264/MPEG4/MJPEG 2 Simultaneous Video Streams
- Surveon Video Intelligent Ready
- MicroSD/SDHC Local Storage for Alarm Capture
- Power over Ethernet (IEEE 802.3af)
- Day/Night Function with IR-Cut Filter
- Advanced ISP Function (WDR, ROI, Luminance Control, 2D/3D De-noise, Edge Enhancement, Lens Correction)
- Built-in IR Illuminators, Effective Up to 20 Meters
- IP66 for Outdoor Application

Mechanical Drawing

Unit:mm(inches)

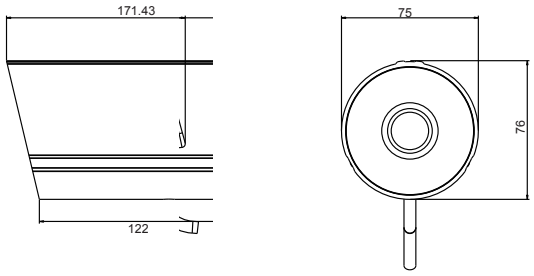

Technical Specifications

Model		CAM3361LV
Camera	Image Sensor	1/2.9" megapixel SONY Exmor CMOS
	Lens	f3-10.5 mm varifocal lens, F1.4
	SNR	48dB
	WDR	Yes
	Day/Night ICR	Yes
	IR LED	Yes(20m)
	Min Illumination	0.01 Lux @ F1.4 (B/W), 0.1 Lux @ F1.4 (Color)
	Iris Control	Auto Electronic Control
	Shutter Time	1/1 ~ 1/1,000,000 s
	Viewing Angle	Diagonal: 130°~38°, Horizontal: 108°~32°, Vertical: 58°~18°
	Camera Angle Adjustment	N/A
	Pan/Tilt/Zoom Functionalities	N/A
Video	Video Compression	H.264/MPEG-4/MJPEG
	Resolution	Up to 1920 x 1080
	Frame Rate	30 fps at 1080P (1920 x 1080) 30 fps at SXGA (1280 x 1024) 30 fps at HD720 (1280 x 720) 30 fps at D1 (720 x 480) 30 fps at VGA (640 x 480) 30 fps at QVGA (320 x 240)
	Video Stream	Dual stream at H.264, MPEG-4, and MJPEG simultaneously
	Bit Rate	32K ~ 10Mbps, VBR, CBR, controller frame rate and quality
	Video Control	AGC (Auto Gain Control), AWB (Auto White Balance), AES (Auto Electronic Shutter), Luminance Control, WDR, 2D/3D De-noise, ROI, Edge Enhancement, Lens Correction, image adjustment
	Intelligent Video	Motion detection, tampering detection (blocked, redirected, defocused, or spray-painted)
	Video Jack	N/A
Audio	Built-in MIC	N/A
	Audio Compression	N/A
	Audio Input/Output	N/A
I/O and Event Management	Alarm In	N/A
	Alarm Out	N/A
	Video Buffer	5 second pre-alarm, 30 second post-alarm
	Event Action	Send snapshot or video clip by FTP or email, record to NAS, record to local storage, trigger DO
Network	Supported Protocols	IPv4, IPv6, ARP, TCP, UDP, ICMP, IGMP, DHCP, NTP, DDNS, SMTP, SNMP, FTP, HTTP, HTTPS, CIFS, PPPoE, UPnP, RTP, RTSP, RTCP, 3GPP, ONVIF, iSCSI
	Ethernet	10/100 Base-T / RJ45
System	Local Storage	microSD/SDHC x 1
	RS-485	N/A
	USB	N/A
	SDK	Surveon SDK 2.0
Viewing System	OS	Microsoft Windows XP/Vista/7
	Browser	IE 8.x or above, Safari, Chrome (via IE Tab)
	Software	Surveon VMS 2.5
General	Temperature	Operation: -10°C ~ 50°C (14°F~122°F)
	Humidity	5 to 90%
	Power	PoE (IEEE 802.3af) with Class 3
	Power Consumption	Max. 7.9W (w/o Heater)
	Dimensions	Length: 165mm, Diameter: 75mm
	Weight	NET: 600g / With bracket: 800g
	Certification	Safety: LVD / EMC: FCC, CE, IP66
	Warranty	3 years

CAM3371EM/EV

2 Megapixel P-iris Day&Night Bullet Network Camera



P-iris

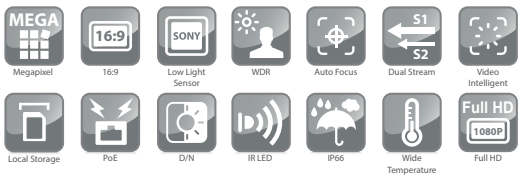

Features

- Megapixel SONY Exmor Sensor
- Up to 1920 x 1080 Video Resolution
- H.264/MPEG4/MJPEG 2 Simultaneous Video Streams
- Support Surveon Video Intelligence
- MicroSD/SDHC Local Storage for Alarm Capture
- PoE (IEEE 802.3af) and Day/Night ICR
- P-iris & 3x Zoom Auto Focus
- Advanced ISP Function (WDR, ROI, Luminance Control, 2D/3D De-noise, Edge Enhancement, Lens Correction)
- Built-in IR Illuminators, Effective Up to 30 Meters
- IP66 and Wide Temperature for Outdoor Application

Mechanical Drawing

Unit:mm(inches)

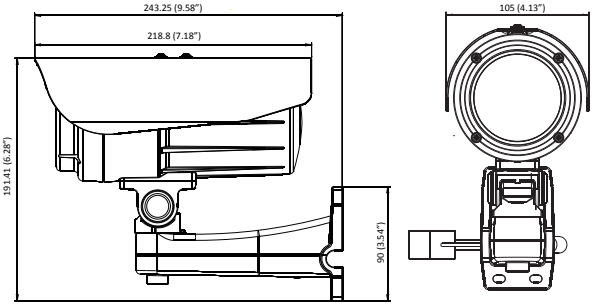

Technical Specifications

Model		CAM3371EM	CAM3371EV
Camera	Image Sensor	1/2.9" megapixel SONY Exmor CMOS	
	Lens	f3-10.5 mm auto focus lens, F1.4	f3-10.5 mm varifocal lens, F1.4
	SNR	50dB	
	WDR	Yes	
	Day/Night ICR	Yes	
	IR LED	Yes (30M)	
	Min Illumination	0.005 Lux @ F1.4 (B/W) 0.05 Lux @ F1.4 (Color)	
	Iris Control	P-Iris	
	Shutter Time	1/1 ~ 1/1,000,000 s	
	Viewing Angle	Diagonal: 130°~38°, Horizontal: 108°~32°, Vertical: 58°~18°	
	Camera Angle Adjustment	N/A	
	Pan/Tilt/Zoom Functionalities	N/A	
Video	Video Compression	H.264/MPEG-4/MJPEG	
	Resolution	Up to 1920 x 1080	
	Frame Rate	30 fps at 1080P (1920 x 1080) 30 fps at SXGA (1280 x 1024) 30 fps at HD720 (1280 x 720) 30 fps at D1 (720 x 480) 30 fps at VGA (640 x 480) 30 fps at QVGA (320 x 240)	
	Video Stream	Dual stream at H.264, MPEG-4, and MJPEG simultaneously	
	Bit Rate	32K ~ 10Mbps, VBR, CBR, controller frame rate and quality	
	Video Control	AGC (Auto Gain Control), AWB (Auto White Balance), AES (Auto Electronic Shutter), Luminance Control, WDR, 2D/3D De-noise, ROI, Edge Enhancement, Lens Correction, image adjustment	
	Intelligent Video	Motion detection, tampering detection (blocked, redirected, defocused, or spray-painted)	
	Video Jack	Yes (BNC, 3371EV)	
Audio	Built-in MIC	N/A	
	Audio Compression	16KHz, ADPCM/G.711	
	Audio Input/Output	3.5mm phone jack (optional)	
I/O and Event Management	Alarm In	1, terminal block (optional)	
	Alarm Out	1, terminal block (optional)	
	Video Buffer	5 second pre-alarm, 30 second post-alarm	
	Event Action	Send snapshot or video clip by FTP or email, record to NAS, trigger DO	
Network	Supported Protocols	IPv4, IPv6, ARP, TCP, UDP, ICMP, IGMP, DHCP, NTP, DDNS, SMTP, SNMP, FTP, HTTP, HTTPS, CIFS, PPPoE, UPnP, RTP, RTSP, RTCP, 3GPP, ONVIF, iSCSI	
	Ethernet	10/100 Base-T / RJ45	
System	Local Storage	microSD/SDHC x 1	
	RS-485	N/A	
	USB	N/A	
	SDK	Surveon SDK 2.0	
Viewing System	OS	Microsoft Windows XP/Vista/7	
	Browser	IE 8.x or above, Safari, Chrome (via IE Tab)	
	Software	Surveon VMS 2.5	
General	Temperature	Operation: -40°C~ 50°C (-40°F~122°F)	
	Humidity	5 to 90%	
	Power	12VDC 1.5A;PoE (IEEE 802.3af) with Class 3	
	Power Consumption	Max. 9.5W (w/ PoE & Heater off) Max. 15.6W (w/ DC Power & Heater on)	
	Dimensions	105mm x 218.8mm x 191.41mm (3.44" x 7.18" x 6.28")	
	Weight	Net:1,400g (3.09lb.) / Gross:2,170g (4.8lb.)	
	Certification	Safety: LVD / EMC: FCC, CE, IP66	
	Warranty	3 years	

CAM3451R3/R6

3 Megapixel Day&Night Bullet Network Camera





Features

- Megapixel Progressive Scan CMOS Sensor
- Up to 2048x1536 25FPS Video Resolution
- H.264/MPEG4/MJPEG 2 Simultaneous Video Streams
- Surveon Video Intelligent Ready
- MicroSD/SDHC Local Storage for Alarm Capture
- Power over Ethernet (IEEE 802.3af)
- Day/Night Function with IR-Cut Filter
- Advanced ISP Function (WDR, ROI, 2D/3D De-noise, Edge Enhancement)
- Built-in IR Illuminators, Effective Up to 20 Meters
- IP66 for Outdoor Application

Mechanical Drawing

Unit:mm(inches)

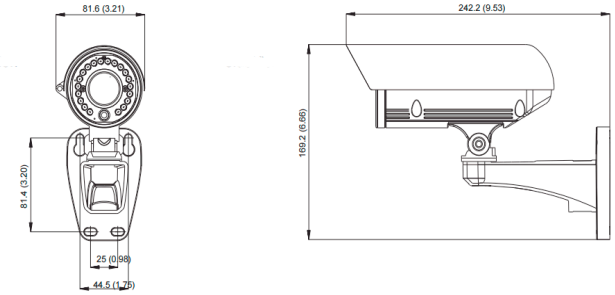

Technical Specifications

Model		CAM3451R3	CAM3451R6
Camera	Image Sensor	1/3" megapixel progressive scan CMOS	
	Lens	f3.6 mm, F1.8	f6.0 mm, F2.0
	SNR	48dB	
	WDR	Yes	
	Day/Night ICR	Yes	
	IR LED	Yes (20M)	
	Min Illumination	0.01 Lux @ F1.8 (B/W) 0.1 Lux @ F1.8 (Color)	
	Iris Control	Fixed	
	Shutter Time	1/1 ~ 1/10,000 s	
	Viewing Angle	Diagonal: 100°, Horizontal: 78°, Vertical: 62.5°	Diagonal: 60.5°, Horizontal: 52.4°, Vertical: 29°
	Camera Angle Adjustment	N/A	
	Pan/Tilt/Zoom Functionalities	N/A	
Video	Video Compression	H.264/MPEG-4/MJPEG	
	Resolution	Up to 2048 x 1536	
	Frame Rate	25 fps at QXGA (2048 x 1536) 30 fps at 1080P (1920 x 1080) 30 fps at SXGA (1280 x 1024) 30 fps at HD720 (1280 x 720) 30 fps at D1 (720 x 480) 30 fps at VGA (640 x 480) 30 fps at QVGA (320 x 240)	
	Video Stream	Dual stream at H.264, MPEG-4, and MJPEG simultaneously	
	Bit Rate	32K ~ 10Mbps, VBR, CBR, controller frame rate and quality	
	Video Control	AGC (Auto Gain Control), AWB (Auto White Balance), AES (Auto Electronic Shutter), Luminance Control, WDR, 2D/3D De-noise, ROI, Edge Enhancement, Lens Correction, image adjustment	
	Intelligent Video	Motion detection, tampering detection (blocked, redirected, defocused, or spray-painted)	
	Video Jack	N/A	
Audio	Built-in MIC	N/A	
	Audio Compression	N/A	
	Audio Input/Output	N/A	
I/O and Event Management	Alarm In	N/A	
	Alarm Out	N/A	
	Video Buffer	5 second pre-alarm, 30 second post-alarm	
	Event Action	Send snapshot or video clip by FTP or email, record to NAS, record to local storage, trigger DO	
Network	Supported Protocols	IPv4, IPv6, ARP, TCP, UDP, ICMP, IGMP, DHCP, NTP, DDNS, SMTP, SNMP, FTP, HTTP, HTTPS, CIFS, PPPoE, UPnP, RTP, RTSP, RTCP, 3GPP, ONVIF, iSCSI	
	Ethernet	10/100 Base-T / RJ45	
System	Local Storage	microSD/SDHC x 1	
	RS-485	N/A	
	USB	N/A	
	SDK	Surveon SDK 2.0	
Viewing System	OS	Microsoft Windows 7/8	
	Browser	IE 8.x or above, Safari, Chrome (via IE Tab)	
	Software	Surveon VMS 2.5	
General	Temperature	Operation: -10°C ~ 50°C (14°F~122°F)	
	Humidity	5 to 90%	
	Power	PoE (IEEE 802.3af) with Class 3	
	Power Consumption	Max. 7.9W (w/o Heater)	
	Dimensions	Length: 165mm, Diameter: 75mm	
	Weight	NET: 600g / With bracket: 800g	
	Certification	Safety: LVD EMC: FCC, CE, IP66	
	Warranty	3 years	

CAM3461LV

3 Megapixel Day&Night Bullet Network Camera





Features

- Megapixel Progressive Scan CMOS Sensor
- Up to 2048x1536 25FPS Video Resolution
- H.264/MPEG4/MJPEG 2 Simultaneous Video Streams
- Surveon Video Intelligent Ready
- MicroSD/SDHC Local Storage for Alarm Capture
- Power over Ethernet (IEEE 802.3af)
- Day/Night Function with IR-Cut Filter
- Advanced ISP Function (WDR, ROI, 2D/3D De-noise, Edge Enhancement)
- Built-in IR Illuminators, Effective Up to 20 Meters
- IP66 for Outdoor Application

Mechanical Drawing

Unit:mm(inches)

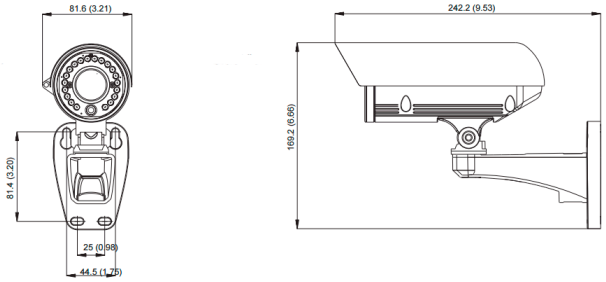

Technical Specifications

Model		CAM3461LV
Camera	Image Sensor	1/3" megapixel progressive scan CMOS
	Lens	f2.8 - 12 mm varifocal lens, F1.4
	SNR	48dB
	WDR	Yes
	Day/Night ICR	Yes
	IR LED	Yes(20m)
	Min Illumination	0.01 Lux @ F1.4(B/W) 0.1 Lux @ F1.4 (Color)
	Iris Control	Auto Electronic Control
	Shutter Time	1/1 ~ 1/10,000 s
	Viewing Angle	Diagonal: 138°~40° Horizontal: 95.5°~30.8° Vertical: 79°~23.3°
	Camera Angle Adjustment	N/A
	Pan/Tilt/Zoom Functionalities	N/A
Video	Video Compression	H.264/MPEG-4/MJPEG
	Resolution	Up to 2048 x 1536
	Frame Rate	25 fps at QXGA (2048 x 1536) 30 fps at 1080P (1920 x 1080) 30 fps at SXGA (1280 x 1024) 30 fps at HD720 (1280 x 720) 30 fps at D1 (720 x 480) 30 fps at VGA (640 x 480) 30 fps at QVGA (320 x 240)
	Video Stream	Dual stream at H.264, MPEG-4, and MJPEG simultaneously
	Bit Rate	32K ~ 10Mbps, VBR, CBR, controller frame rate and quality
	Video Control	AGC (Auto Gain Control), AWB (Auto White Balance), AES (Auto Electronic Shutter), Luminance Control, WDR, 2D/3D De-noise, ROI, Edge Enhancement, Lens Correction, image adjustment
	Intelligent Video	Motion detection, tampering detection (blocked, redirected, defocused, or spray-painted)
	Video Jack	N/A
Audio	Built-in MIC	N/A
	Audio Compression	N/A
	Audio Input/Output	N/A
I/O and Event Management	Alarm In	N/A
	Alarm Out	N/A
	Video Buffer	5 second pre-alarm, 30 second post-alarm
	Event Action	Send snapshot or video clip by FTP or email, record to NAS, record to local storage, trigger DO
Network	Supported Protocols	IPv4, IPv6, ARP, TCP, UDP, ICMP, IGMP, DHCP, NTP, DDNS, SMTP, SNMP, FTP, HTTP, HTTPS, CIFS, PPPoE, UPnP, RTP, RTSP, RTCP, 3GPP, ONVIF, iSCSI
	Ethernet	10/100 Base-T / RJ45
System	Local Storage	microSD/SDHC x 1
	RS-485	N/A
	USB	N/A
	SDK	Surveon SDK 2.0
Viewing System	OS	Microsoft Windows 7/8
	Browser	IE 8.x or above, Safari, Chrome (via IE Tab)
	Software	Surveon VMS 2.5
General	Temperature	Operation: -10°C ~ 50°C (14°F~122°F)
	Humidity	5 to 90%
	Power	PoE (IEEE 802.3af) with Class 3
	Power Consumption	Max. 7.9W (w/o Heater)
	Dimensions	Length: 165mm, Diameter: 75mm
	Weight	NET: 600g / With bracket: 800g
	Certification	Safety: LVD / EMC: FCC, CE, IP66
	Warranty	3 years

CAM3471HEM/HEV

3 Megapixel Real Time HDR Day&Night Bullet Network Camera



HDR P-iris



Features

- 3 Megapixel Progressive Scan Sensor
- Up to 2048x1536 30PFS & 1920x1080 60FPS
- H.264/MPEG4/MJPEG 2 Simultaneous Video Streams
- Support Surveon Video Intelligence
- Advanced ISP Function (HDR, ROI, 2D/3D De-noise, Edge Enhancement)
- PoE (IEEE 802.3af) and Day/Night IR-Cut Filter
- P-iris & 3x Zoom Auto Focus
- Built-in IR Illuminators, Effective Up to 30 Meters
- IP66, Wide Temperature for Outdoor Application

Mechanical Drawing

Unit:mm(inches)

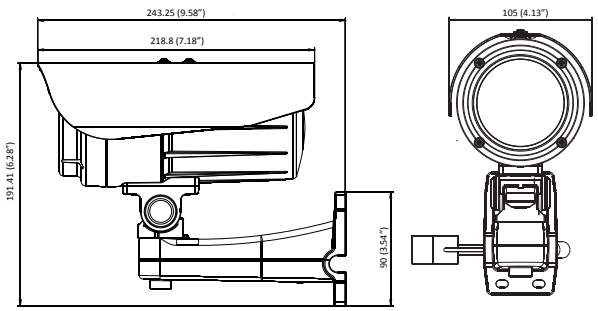

Technical Specifications

Model		CAM3471HEM	CAM3471HEV
Camera	Image Sensor	1/3" megapixel progressive scan CMOS	
	Lens	f3-10.5 mm auto focus lens, F1.4	f3-10.5 mm varifocal lens, F1.4
	SNR	50dB	
	WDR	Yes (HDR, 120 dB)	
	Day/Night ICR	Yes	
	IR LED	Yes (Max. 30M on limited shutter)	
	Min Illumination	0.01 Lux @ F1.2 (B/W), 0.1 Lux @ F1.2 (Color)	
	Iris Control	P-Iris	
	Shutter Time	1/1 ~ 1/10,000 s	
	Viewing Angle	DIAGONAL: 130° ~ 38°, HORIZONTAL: 108° ~ 32° VERTICAL: 58° ~ 18°	
	Camera Angle Adjustment	N/A	
	Pan/Tilt/Zoom Functionalities	N/A	
Video	Video Compression	H.264/MPEG-4/MJPEG	
	Resolution	Up to 2048 x 1536	
	Frame Rate	30 fps at QXGA (2048 x 1536) 60 fps at 1080P (1920 x 1080) 60 fps at SXGA (1280 x 1024) 60 fps at 720P (1280 x 720) 60 fps at D1 (720 x 480) 60 fps at VGA (640 x 480) 60 fps at QVGA (320 x 240)	
	Video Stream	Dual stream at H.264, MPEG-4, and MJPEG simultaneously	
	Bit Rate	32K ~ 20Mbps, VBR, CBR, controller frame rate and quality	
	Video Control	AGC (Auto Gain Control), AWB (Auto White Balance), AES (Auto Electronic Shutter), BLC (Back Light Compensation), HDR, 2D/3D De-noise, ROI, Edge Enhancement, image adjustment	
	Intelligent Video	Motion detection, tampering detection (blocked, redirected, defocused, or spray-painted)	
	Video Jack	Yes (BNC, 3471HEV)	
Audio	Built-in MIC	N/A	
	Audio Compression	16KHz, ADPCM/G.711	
	Audio Input/Output	3.5mm phone jack (optional)	
I/O and Event Management	Alarm In	1, terminal block (optional)	
	Alarm Out	1, terminal block (optional)	
	Video Buffer	5 second pre-alarm, 30 second post-alarm	
	Event Action	Send snapshot or video clip by FTP or email, record to NAS, record to local storage, trigger DO	
Network	Supported Protocols	IPv4, IPv6, ARP, TCP, UDP, ICMP, IGMP, DHCP, NTP, DDNS, SMTP, SNMP, FTP, HTTP, HTTPS, CIFS, PPPoE, UPnP, RTP, RTSP, RTCP, 3GPP, ONVIF, iSCSI	
	Ethernet	10/100 Base-T / RJ45	
System	Local Storage	microSD/SDHC x 1	
	RS-485	N/A	
	USB	N/A	
	SDK	Surveon SDK 2.0	
Viewing System	OS	Microsoft Windows 7/8	
	Browser	IE 8.x or above, Safari, Chrome (via IE Tab)	
	Software	Surveon VMS 2.5	
General	Temperature	Operation: -40°C~ 50°C (-40°F~122°F)	
	Humidity	5 to 90%	
	Power	12VDC 1.5A;PoE (IEEE 802.3af) with Class 3	
	Power Consumption	Max. 9W (w/o Heater) Max. 27W (w/ Heater & DC Power)	
	Dimensions	105mm x 218.8mm x 191.41mm (3.44" x 7.18" x 6.28")	
	Weight	Net:1,400g (3.09lb.) Gross:2,170g (4.8lb.)	
	Certification	Safety: LVD / EMC: FCC, CE, IP66	
	Warranty	3 years	

CAM3471HI

3 Megapixel Video Analytics Day&Night Bullet Network Camera



HDR P-iris



Features

- Megapixel Progressive Scan HDR Sensor
- Up to 2048x1536 30FPS & 1920x1080 60FPS
- H.264/MPEG4/MJPEG 2 Simultaneous Video Streams
- Advanced Video Analytics (Optical Diagnosis, Object Loitering Detection, Motion Direction Detection, Entering/ Leaving Detection, Object Counting)
- Advanced ISP Function (HDR, ROI, 2D/3D De-noise, Edge Enhancement)
- PoE (IEEE 802.3af) and Day/Night IR-Cut Filter
- P-iris & 3x Zoom Auto Focus
- Built-in IR Illuminators, Effective Up to 30 Meters
- IP66 and Wide Temperature for Outdoor Application

Mechanical Drawing

Unit:mm(inches)

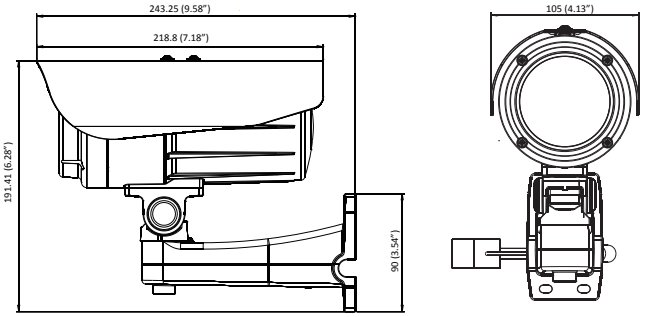

Technical Specifications

Model		CAM3471HI
Camera	Image Sensor	1/3" megapixel progressive scan CMOS
	Lens	f3-10.5 mm auto focus lens, F1.4
	SNR	50dB
	WDR	Yes (HDR, 120 dB)
	Day/Night ICR	Yes
	IR LED	Yes (Max. 30M on limited shutter)
	Min Illumination	0.01 Lux @ F1.4 (B/W) / 0.1 Lux @ F1.4 (Color)
	Iris Control	P-Iris
	Shutter Time	1/1 ~ 1/10,000 s
	Viewing Angle	DIAGONAL: 130° ~ 38° HORIZONTAL: 108° ~ 32° VERTICAL: 58° ~ 18°
	Camera Angle Adjustment	N/A
	Pan/Tilt/Zoom Functionalities	N/A
Video	Video Compression	H.264/MPEG-4/MJPEG
	Resolution	Up to 2048 x 1536
	Frame Rate	30 fps at QXGA (2048 x 1536) 60 fps at 1080P (1920 x 1080) 60 fps at SXGA (1280 x 1024) 60 fps at 720P (1280 x 720) 60 fps at D1 (720 x 480) 60 fps at VGA (640 x 480) 60 fps at QVGA (320 x 240)
	Video Stream	Dual stream at H.264, MPEG-4, and MJPEG simultaneously
	Bit Rate	32K ~ 20Mbps, VBR, CBR, controller frame rate and quality
	Video Control	AGC (Auto Gain Control), AWB (Auto White Balance), AES (Auto Electronic Shutter), Luminance Control, WDR, 2D/3D De-noise, ROI, Edge Enhancement, Lens Correction, image adjustment
	Intelligent Video	Motion detection, tampering detection (blocked, redirected, defocused, or spray-painted)
	Video Analytics	Optical Diagnosis, Object Loitering Detection, Object Motion Direction Detection, Area - Entering or Leaving Detection, Object Counting by Wire (directional) or Area (in/out)
	Video Jack	N/A
Audio	Built-in MIC	N/A
	Audio Compression	16KHz, ADPCM/G.711
	Audio Input/Output	3.5mm phone jack (optional)
I/O and Event Management	Alarm In	1, terminal block (optional)
	Alarm Out	1, terminal block (optional)
	Video Buffer	5 second pre-alarm, 30 second post-alarm
	Event Action	Send snapshot or video clip by FTP or email, record to NAS, record to local storage, trigger DO
Network	Supported Protocols	IPv4, IPv6, ARP, TCP, UDP, ICMP, IGMP, DHCP, NTP, DDNS, SMTP, SNMP, FTP, HTTP, HTTPS, CIFS, PPPoE, UPnP, RTP, RTSP, RTCP, 3GPP, ONVIF, iSCSI
	Ethernet	10/100 Base-T / RJ45
System	Local Storage	microSD/SDHC x 1
	RS-485	N/A
	USB	N/A
	SDK	Surveon SDK 2.0
Viewing System	OS	Microsoft Windows 7/8
	Browser	IE 8.x or above, Safari, Chrome (via IE Tab)
	Software	Surveon VMS 2.5
General	Temperature	Operation: -40°C~ 50°C (-40°F~122°F)
	Humidity	5 to 90%
	Power	12VDC 1.5A; PoE (IEEE 802.3af) with Class 3
	Power Consumption	Max. 9.5W (w/ PoE & Heater off) Max. 15.6W (w/ DC Power & Heater on)
	Dimensions	105mm x 218.8mm x 191.41mm (3.44" x 7.18" x 6.28")
	Weight	Net:1,400g (3.09lb.) / Gross:2,170g (4.8lb.)
	Certification	Safety: LVD / EMC: FCC, CE, IP66
	Warranty	3 years

CAM3571M/MP/VP

5 Megapixel Auto Focus Day&Night Bullet Network Camera



Piris



Features

- 5 Megapixel Progressive Scan Sensor
- Up to 2560 x 1920 Video Resolution
- H.264/MPEG4/MJPEG 2 Simultaneous Video Streams
- Support Surveon Video Intelligence
- Advanced ISP Function (WDR, ROI, Luminance Control, 2D/3D De-noise, Edge Enhancement, Lens Correction)
- PoE (IEEE 802.3af) and Day/Night IR-Cut Filter
- Built-in IR Illuminators, Effective Up to 30 Meters
- IP66 and Wide Temperature for Outdoor Application
- 2x Optical Zoom with Auto Focus (CAM3571M/3571MP)

Mechanical Drawing

Unit:mm(inches)

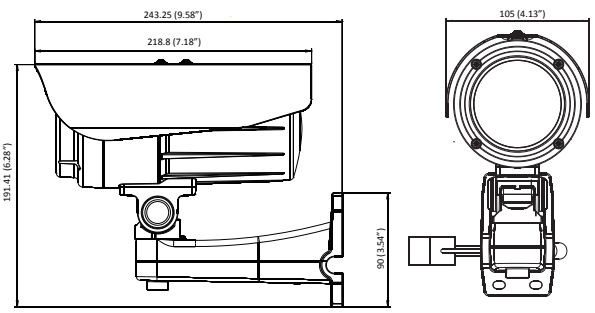

Technical Specifications

Model		CAM3571M	CAM3571MP	CAM3571VP
Camera	Image Sensor	1/2.5" megapixel progressive scan CMOS		
	Lens	4.5 - 9 mm auto focus lens, F1.2	4.5 - 9 mm auto focus lens, F1.2	3.3 - 10.5 mm varifocal lens, F1.4
	SNR	48dB		
	WDR	Yes		
	Day/Night ICR	Yes		
	IR LED	Yes (Max. 30M on limited shutter)		
	Min Illumination	0.01 Lux @ F1.2 (B/W), 0.1 Lux @ F1.2 (Color)		
	Iris Control	DC drive	P-Iris	P-Iris
	Shutter Time	1/1 ~ 1/1,000,000 s		
	Viewing Angle	Diagonal: 98.5°- 43.8° Horizontal: 80.5°- 38.1° Vertical: 41.3° - 21.3°		Diagonal: 126° - 40° Horizontal: 98° - 32° Vertical: 72° - 24°
	Camera Angle Adjustment	N/A		
	Pan/Tilt/Zoom Functionalities	N/A		
Video	Video Compression	H.264/MPEG-4/MJPEG		
	Resolution	Up to 2560 x 1920		
	Frame Rate	14 fps at QSXGA (2560 x 1920), 21 fps at QXGA (2048 x 1536), 30 fps at 1080P (1920 x 1080), 30 fps at SXGA (1280 x 1024), 30 fps at 720P (1280 x 720), 30 fps at D1 (720 x 480), 30 fps at VGA (640 x 480), 30 fps at QVGA (320 x 240)		
	Video Stream	Dual stream at H.264, MPEG-4, and MJPEG simulataneously		
	Bit Rate	32K ~ 20Mbps, VBR, CBR, controller frame rate and quality		
	Video Control	AGC (Auto Gain Control), AWB (Auto White Balance), AES (Auto Electronic Shutter), Luminance Control, WDR, 2D/3D De-noise, ROI, Edge Enhancement, Lens Correction, image adjustment		
	Intelligent Video	Motion detection, tampering detection (blocked, redirected, defocused, or spray-painted)		
	Video Jack	Yes (BNC, 3571VP)		
Audio	Built-in MIC	N/A		
	Audio Compression	16KHz, ADPCM/G.711		
	Audio Input/Output	3.5mm phone jack (optional)		
I/O and Event Management	Alarm In	1, terminal block (optional)		
	Alarm Out	1, terminal block (optional)		
	Video Buffer	5 second pre-alarm, 30 second post-alarm		
	Event Action	Send snapshot or video clip by FTP or email, record to NAS, record to local storage, trigger DO		
Network	Supported Protocols	IPv4, IPv6, ARP, TCP, UDP, ICMP, IGMP, DHCP, NTP, DDNS, MTP, SNMP, FTP, HTTP, HTTPS, CIFS, PPPoE, UPnP, RTP, RTSP, RTCP, 3GPP, ONVIF, iSCSI		
	Ethernet	10/100 Base-T / RJ45		
System	Local Storage	microSD/SDHC x 1(Class 4/Class 6 only)		
	RS-485	N/A		
	USB	N/A		
	SDK	Surveon SDK 2.0		
Viewing System	OS	Microsoft Windows XP/Vista/7		
	Browser	IE 8.x or above, Safari, Chrome (via IE Tab)		
	Software	Surveon VMS 2.5		
General	Temperature	Operation: -40°C~ 50°C (-40°F~122°F) Storage: -30°C ~ 60°C (-22°F~140°F)		
	Humidity	5 to 90%		
	Power	12VDC 1.5A;PoE (IEEE 802.3af) with Class 3		
	Power Consumption	Max. 9W (w/o Heater) / Max. 27W (w/ Heater & DC Power)		
	Dimensions	105mm x 218.8mm x 191.41mm (3.44" x 7.18" x 6.28")		
	Weight	Net:1,400g (3.09lb.) / Gross:2,170g (4.8lb.)		
	Certification	Safety: LVD / EMC: FCC, CE, GOST, IP66		
	Warranty	3 years		

CAM4211

Megapixel 3-Axis Day&Night Fixed Dome Network Camera



3-Axis



Features

- Megapixel Progressive Scan Sensor
- Up to 1280 x 800 Video Resolution
- H.264/MJPEG 2 Simultaneous Video Streams
- Support Surveon Video Intelligence
- MicroSD/SDHC Local Storage for Alarm Capture
- Power over Ethernet (IEEE 802.3af)
- Day/Night Function with IR-Cut Filter
- Built-in IR Illuminators, Effective Up to 10 Meters
- 3-Axis Support

Mechanical Drawing

Unit:mm(inches)

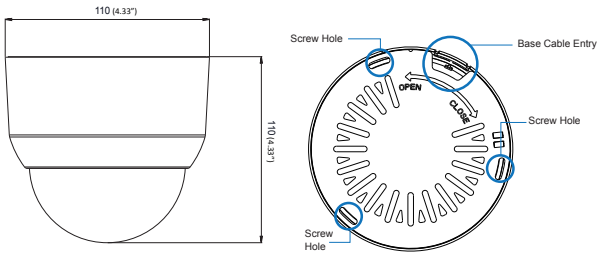

Technical Specifications

Model		CAM4211
Camera	Image Sensor	1/4" megapixel progressive scan CMOS
	Lens	f2.8 mm, F1.8
	SNR	48dB
	WDR	Yes
	Day/Night ICR	Yes
	IR LED	Yes (10M)
	Min Illumination	0.01 Lux @ F1.8 (B/W) / 0.1 Lux @ F1.8 (Color)
	Iris Control	Fixed
	Shutter Time	1/2 ~ 1/50,000 s
	Viewing Angle	Diagonal: 92° Horizontal: 79° Vertical: 49°
	Camera Angle Adjustment	Pan 0° ~340° Tilt 20° ~90° Rotate ±170°
	Pan/Tilt/Zoom Functionalities	N/A
Video	Video Compression	H.264/MJPEG
	Resolution	Up to 1280 x 800
	Frame Rate	30 fps at WXGA (1280 x 800) 30 fps at HD720 (1280 x 720) 30 fps at D1 (720 x 480) 30 fps at VGA (640 x 480) 30 fps at QVGA (320 x 240)
	Video Stream	Dual stream at H.264 and MJPEG simultaneously
	Bit Rate	32K ~ 10Mbps, VBR, CBR, controller frame rate and quality
	Video Control	AGC (Auto Gain Control), AWB (Auto White Balance), AES (Auto Electronic Shutter), image adjustment
	Intelligent Video	Motion detection, tampering detection (blocked, redirected, defocused, or spray-painted)
	Video Jack	N/A
Audio	Built-in MIC	Yes
	Audio Compression	16KHz, ADPCM/G.711
	Audio Input/Output	3.5mm phone jack (optional)
I/O and Event Management	Alarm In	1, terminal block (optional)
	Alarm Out	1, terminal block (optional)
	Video Buffer	5 second pre-alarm, 5 second post-alarm
	Event Action	Send snapshot or video clip by FTP or email, record to NAS, record to local storage, trigger DO
Network	Supported Protocols	IPv4, IPv6, ARP, TCP, UDP, ICMP, IGMP, DHCP, NTP, DDNS, SMTP, FTP, HTTP, HTTPS, CIFS, PPPoE, UPnP, RTP, RTSP, RTCP, 3GPP, ONVIF, iSCSI
	Ethernet	10/100 Base-T / RJ45
System	Local Storage	microSD/SDHC x 1 (Class 4/Class 6 only)
	RS-485	N/A
	USB	N/A
	SDK	Surveon SDK 2.0
Viewing System	OS	Microsoft Windows XP/Vista/7
	Browser	IE 8.x or above, Safari, Chrome (via IE Tab)
	Software	Surveon VMS 2.5
General	Temperature	Operation: -10°C~ 50°C (14°F~122°F)
	Humidity	5 to 90%
	Power	12VDC 1.5A ; PoE (IEEE 802.3af) with Class 3
	Power Consumption	Max. 7W
	Dimensions	ø110mm x 110mm (H)
	Weight	Net: 345g / Gross: 585g
	Certification	Safety: LVD / EMC: FCC, CE
	Warranty	3 years

CAM4221

Megapixel 3-Axis Day&Night Fixed Dome Network Camera



3-Axis

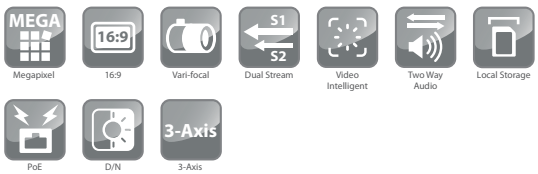

Features

- Megapixel Progressive Scan Sensor
- Up to 1280 x 800 Video Resolution
- H.264/MPEG4/MJPEG 2 Simultaneous Video Streams
- Surveon Video Intelligent Ready
- MicroSD/SDHC Local Storage for Alarm Capture
- Power over Ethernet (IEEE 802.3af)
- Day/Night Function with IR-Cut Filter
- 3-Axis Support

Mechanical Drawing

Unit:mm(inches)

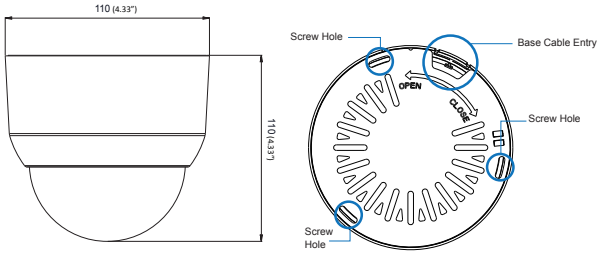

Technical Specifications

Model		CAM4221
Camera	Image Sensor	1/4" megapixel progressive scan CMOS
	Lens	f2.8-12 mm varifocal lens, F1.4
	SNR	48dB
	WDR	Yes
	Day/Night ICR	Yes
	IR LED	N/A
	Min Illumination	0.01 Lux @ F1.4 (B/W) / 0.1 Lux @ F1.4 (Color)
	Iris Control	Auto Electronic Control
	Shutter Time	1/2 ~ 1/50,000 s
	Viewing Angle	Diagonal: 87.6°~27.8° Horizontal: 73°~23.4° Vertical: 44.8°~14.8°
	Camera Angle Adjustment	Pan 0° ~340° Tilt 20° ~90° Rotate ±110°
	Pan/Tilt/Zoom Functionalities	N/A
Video	Video Compression	H.264/MJPEG
	Resolution	Up to 1280 x 800
	Frame Rate	30 fps at WXGA (1280 x 800) 30 fps at HD720 (1280 x 720) 30 fps at D1 (720 x 480) 30 fps at VGA (640 x 480) 30 fps at QVGA (320 x 240)
	Video Stream	Dual stream at H.264 and MJPEG simultaneously
	Bit Rate	32K ~ 10Mbps, VBR, CBR, controller frame rate and quality
	Video Control	AGC (Auto Gain Control), AWB (Auto White Balance), AES (Auto Electronic Shutter), image adjustment
	Intelligent Video	Motion detection, tampering detection (blocked, redirected, defocused, or spray-painted)
	Video Jack	N/A
Audio	Built-in MIC	Yes
	Audio Compression	16KHz, ADPCM/G.711
	Audio Input/Output	3.5mm phone jack (optional)
I/O and Event Management	Alarm In	1, terminal block (optional)
	Alarm Out	1, terminal block (optional)
	Video Buffer	5 second pre-alarm, 5 second post-alarm
	Event Action	Send snapshot or video clip by FTP or email, record to NAS, record to local storage, trigger DO
Network	Supported Protocols	IPv4, IPv6, ARP, TCP, UDP, ICMP, IGMP, DHCP, NTP, DDNS, SMTP, FTP, HTTP, HTTPS, CIFS, PPPoE, UPnP, RTP, RTSP, RTCP, 3GPP, ONVIF, iSCSI
	Ethernet	10/100 Base-T / RJ45
System	Local Storage	microSD/SDHC x 1 (Class 4/Class 6 only)
	RS-485	N/A
	USB	N/A
	SDK	Surveon SDK 2.0
Viewing System	OS	Microsoft Windows XP/Vista/7
	Browser	IE 8.x or above, Safari, Chrome (via IE Tab)
	Software	Surveon VMS 2.5
General	Temperature	Operation: -10°C~ 50°C (14°F~122°F)
	Humidity	5 to 90%
	Power	12VDC 1.5A ; PoE (IEEE 802.3af) with Class 3
	Power Consumption	Max. 5W
	Dimensions	ø110mm x 100mm (H)
	Weight	Net: 345g / Gross: 585g
	Certification	Safety: LVD / EMC: FCC, CE
	Warranty	3 years

CAM4311S2

2 Megapixel 3-Axis Day&Night Fixed Dome Network Camera



3-Axis Exmor™ CMOS Sensor



Features

- 2 Megapixel Progressive Scan Sensor
- Up to 1920 x 1080 Video Resolution
- H.264/MPEG4/MJPEG 2 Simultaneous Video Streams
- Surveon Video Intelligent Ready
- Advanced ISP Function (WDR, ROI, Luminance Control, 2D/3D De-noise, Edge Enhancement, Lens Correction)
- PoE (IEEE 802.3af) and Day/Night IR-Cut Filter
- Built-in IR Illuminators, Effective Up to 10 Meters
- 3-Axis Support

Mechanical Drawing

Unit:mm(inches)

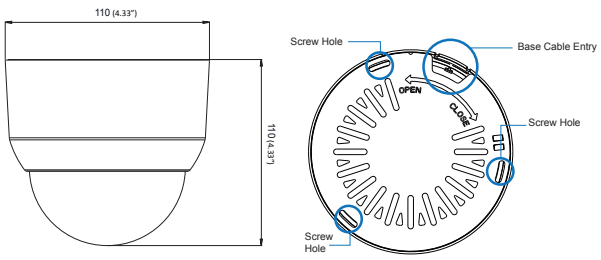

Technical Specifications

Model		CAM4311S2
Camera	Image Sensor	1/2.9" 2 megapixel SONY Exmor CMOS
	Lens	f2.8 mm, F1.8
	SNR	48dB
	WDR	Yes
	Day/Night ICR	Yes
	IR LED	Yes (10M)
	Min Illumination	0.01 Lux @ F1.8 (B/W), 0.1 Lux @ F1.8 (Color)
	Iris Control	Fixed
	Shutter Time	1/1 ~ 1/1,000,000 s
	Viewing Angle	Diagonal: 135°, Horizontal: 105°, Vertical: 87°
	Camera Angle Adjustment	Pan 0° ~340° Tilt 20° ~90° Rotate ±170°
	Pan/Tilt/Zoom Functionalities	N/A
Video	Video Compression	H.264/MPEG-4/MJPEG
	Resolution	Up to 1920 x 1080
	Frame Rate	30 fps at 1080P (1920 x 1080) 30 fps at SXGA (1280 x 1024) 30 fps at HD720 (1280 x 720) 30 fps at D1 (720 x 480) 30 fps at VGA (640 x 480) 30 fps at QVGA (320 x 240)
	Video Stream	Dual stream at H.264, MPEG-4, and MJPEG simultaneously
	Bit Rate	32K ~ 10Mbps, VBR, CBR, controller frame rate and quality
	Video Control	AGC (Auto Gain Control), AWB (Auto White Balance), AES (Auto Electronic Shutter), Luminance Control, WDR, 2D/3D De-noise, ROI, Edge Enhancement, Lens Correction, Image Adjustment
	Intelligent Video	Motion detection, tampering detection (blocked, redirected, defocused, or spray-painted)
	Video Jack	N/A
Audio	Built-in MIC	Yes
	Audio Compression	16KHz, ADPCM/G.711
	Audio Input/Output	3.5mm phone jack (optional)
I/O and Event Management	Alarm In	1, terminal block (optional)
	Alarm Out	1, terminal block (optional)
	Video Buffer	5 second pre-alarm, 30 second post-alarm
	Event Action	Send snapshot or video clip by FTP or email, record to NAS, trigger DO
Network	Supported Protocols	IPv4, IPv6, ARP, TCP, UDP, ICMP, IGMP, DHCP, NTP, DDNS, SMTP, SNMP, FTP, HTTP, HTTPS, CIFS, PPPoE, UPnP, RTP, RTSP, RTCP, 3GPP, ONVIF, iSCSI
	Ethernet	10/100 Base-T / RJ45
System	Local Storage	microSD/SDHC x 1 (Class 4/Class 6 only)
	RS-485	N/A
	USB	N/A
	SDK	Surveon SDK 2.0
Viewing System	OS	Microsoft Windows XP/Vista/7
	Browser	IE 8.x or above, Safari, Chrome (via IE Tab)
	Software	Surveon VMS 2.5
General	Temperature	OOperation: -10°C ~ 50°C (14°F~122°F)
	Humidity	5 to 90%
	Power	PoE (IEEE 802.3af) with Class 3
	Power Consumption	Max. 6.5W
	Dimensions	ø110mm x 100mm (H)
	Weight	Net: 345g / Gross: 585g
	Certification	Safety: LVD / EMC: FCC, CE
	Warranty	3 years

CAM4321LV

2 Megapixel 3-Axis Day&Night Fixed Dome Network Camera



3-Axis

Exmor™ CMOS Sensor



Features

- 2 Megapixel Progressive Scan Sensor
- Up to 1920 x 1080 Video Resolution
- H.264/MPEG4/MJPEG 2 Simultaneous Video Streams
- Support Surveon Video Intelligence
- Advanced ISP Function (WDR, ROI, Luminance Control, 2D/3D De-noise, Edge Enhancement, Lens Correction)
- PoE (IEEE 802.3af) and Day/Night IR-Cut Filter
- Built-in IR Illuminators, Effective Up to 20 Meters
- 3-Axis Support

Mechanical Drawing

Unit:mm(inches)

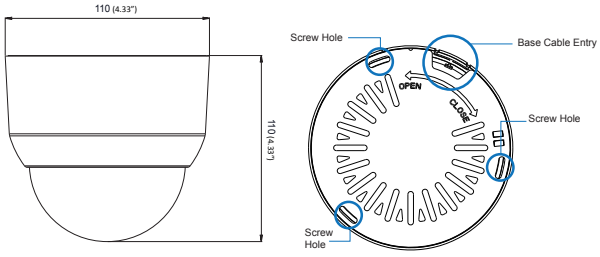

Technical Specifications

Model		CAM4321LV
Camera	Image Sensor	1/2.9" megapixel SONY Exmor CMOS
	Lens	f2.8-12 mm varifocal lens, F1.4
	SNR	48dB
	WDR	Yes
	Day/Night ICR	Yes
	IR LED	Yes(20m)
	Min Illumination	0.01 Lux @ F1.4 (B/W), 0.1 Lux @ F1.4 (Color)
	Iris Control	Auto Electronic Control
	Shutter Time	1/1 ~ 1/1,000,000 s
	Viewing Angle	Diagonal: 138°~40°, Horizontal: 95.5°~30.8°, Vertical: 79°~23.3°
	Camera Angle Adjustment	Pan 0° ~340° Tilt 20° ~90° Rotate ±110°
	Pan/Tilt/Zoom Functionalities	N/A
Video	Video Compression	H.264/MPEG-4/MJPEG
	Resolution	Up to 1920 x 1080
	Frame Rate	30 fps at 1080P (1920 x 1080) 30 fps at SXGA (1280 x 1024) 30 fps at HD720 (1280 x 720) 30 fps at D1 (720 x 480) 30 fps at VGA (640 x 480) 30 fps at QVGA (320 x 240)
	Video Stream	Dual stream at H.264, MPEG-4, and MJPEG simultaneously
	Bit Rate	32K ~ 10Mbps, VBR, CBR, controller frame rate and quality
	Video Control	AGC (Auto Gain Control), AWB (Auto White Balance), AES (Auto Electronic Shutter), Luminance Control, WDR, 2D/3D De-noise, ROI, Edge Enhancement, Lens Correction, Image Adjustment
	Intelligent Video	Motion detection, tampering detection (blocked, redirected, defocused, or spray-painted)
	Video Jack	N/A
Audio	Built-in MIC	Yes
	Audio Compression	16KHz, ADPCM/G.711
	Audio Input/Output	3.5mm phone jack (optional)
I/O and Event Management	Alarm In	1, terminal block (optional)
	Alarm Out	1, terminal block (optional)
	Video Buffer	5 second pre-alarm, 30 second post-alarm
	Event Action	Send snapshot or video clip by FTP or email, record to NAS, trigger DO
Network	Supported Protocols	IPv4, IPv6, ARP, TCP, UDP, ICMP, IGMP, DHCP, NTP, DDNS, SMTP, SNMP, FTP, HTTP, HTTPS, CIFS, PPPoE, UPnP, RTP, RTSP, RTCP, 3GPP, ONVIF, iSCSI
	Ethernet	10/100 Base-T / RJ45
System	Local Storage	microSD/SDHC x 1(Class 4/Class 6 only)
	RS-485	N/A
	USB	N/A
	SDK	Surveon SDK 2.0
Viewing System	OS	Microsoft Windows XP/Vista/7
	Browser	IE 8.x or above, Safari, Chrome (via IE Tab)
	Software	Surveon VMS 2.5
General	Temperature	Operation: -10°C ~ 50°C (14°F~122°F)
	Humidity	5 to 90%
	Power	PoE (IEEE 802.3af) with Class 3
	Power Consumption	Max. 6.5W
	Dimensions	ø110mm x 100mm (H)
	Weight	Net: 345g / Gross: 585g
	Certification	Safety: LVD / EMC: FCC, CE
	Warranty	3 years

CAM4410S2

3 Megapixel 3-Axis Indoor Fixed Dome Network Camera



3-Axis

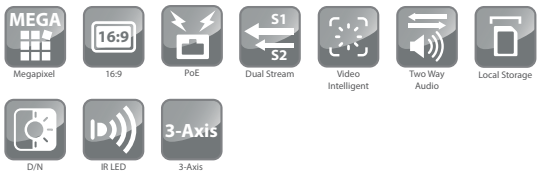

Features

- Megapixel Progressive Scan CMOS Sensor
- Up to 2048x1536 25FPS Video Resolution
- H.264/MPEG4/MJPEG 2 Simultaneous Video Streams
- Surveon Video Intelligent Ready
- Advanced ISP Function (WDR, ROI, 2D/3D De-noise, Edge Enhancement)
- MicroSD/SDHC Local Storage for Alarm Capture
- Power over Ethernet (IEEE 802.3af)
- 3-Axis Support

Mechanical Drawing

Unit:mm(inches)

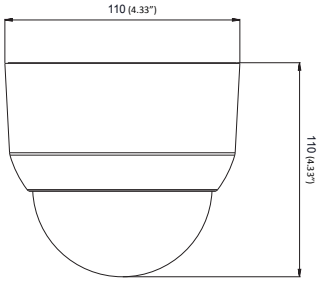

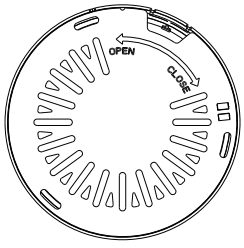

Technical Specifications

Model		CAM4410S2
Camera	Image Sensor	1/3" megapixel progressive scan CMOS
	Lens	f2.8 mm, F1.8
	SNR	48dB
	WDR	Yes
	Day/Night ICR	N/A
	IR LED	N/A
	Min Illumination	0.01 Lux @ F1.8 (B/W) 0.1 Lux @ F1.8 (Color)
	Iris Control	Fixed
	Shutter Time	1/1 ~ 1/10,000 s
	Viewing Angle	Diagonal: 128°, Horizontal: 98°, Vertical: 81.5°
	Camera Angle Adjustment	Pan 0° ~340° Tilt 20° ~90° Rotate ±170°
	Pan/Tilt/Zoom Functionalities	N/A
Video	Video Compression	H.264/MPEG-4/MJPEG
	Resolution	Up to 2048 x 1536
	Frame Rate	25 fps at QXGA (2048 x 1536) 30 fps at 1080P (1920 x 1080) 30 fps at SXGA (1280 x 1024) 30 fps at HD720 (1280 x 720) 30 fps at D1 (720 x 480) 30 fps at VGA (640 x 480) 30 fps at QVGA (320 x 240)
	Video Stream	Dual stream at H.264, MPEG-4, and MJPEG simultaneously
	Bit Rate	32K ~ 10Mbps, VBR, CBR, controller frame rate and quality
	Video Control	AGC (Auto Gain Control), AWB (Auto White Balance), AES (Auto Electronic Shutter), BLC (Back Light Compensation), WDR, 2D/3D De-noise, ROI, Edge Enhancement, image adjustment
	Intelligent Video	Motion detection, tampering detection (blocked, redirected, defocused, or spray-painted)
	Video Jack	N/A
Audio	Built-in MIC	Yes
	Audio Compression	16KHz, ADPCM/G.711
	Audio Input/Output	3.5mm phone jack (optional)
I/O and Event Management	Alarm In	1, terminal block (optional)
	Alarm Out	1, terminal block (optional)
	Video Buffer	5 second pre-alarm, 30 second post-alarm
	Event Action	Send snapshot or video clip by FTP or email, record to NAS, record to local storage, trigger DO
Network	Supported Protocols	IPv4, IPv6, ARP, TCP, UDP, ICMP, IGMP, DHCP, NTP, DDNS, SMTP, SNMP, FTP, HTTP, HTTPS, CIFS, PPPoE, UPnP, RTP, RTSP, RTCP, 3GPP, ONVIF, iSCSI
	Ethernet	10/100 Base-T / RJ45
System	Local Storage	microSD/SDHC x 1
	RS-485	N/A
	USB	N/A
	SDK	Surveon SDK 2.0
Viewing System	OS	Microsoft Windows 7/8
	Browser	IE 8.x or above, Safari, Chrome (via IE Tab)
	Software	Surveon VMS 2.5
General	Temperature	Operation: -10°C ~ 50°C (14°F~122°F)
	Humidity	5 to 90%
	Power	PoE (IEEE 802.3af) with Class 3
	Power Consumption	Max. 7W
	Dimensions	ø110mm x 100mm (H)
	Weight	Net: 345g Gross: 585g
	Certification	Safety: LVD EMC: FCC, CE
	Warranty	3 years

CAM4411S2/S3/S4/S6

3 Megapixel 3-Axis Day&Night Fixed Dome Network Camera



3-Axis



Features

- 3 Megapixel Progressive Scan Sensor
- Up to 2048x1536 25PFS
- H.264/MPEG4/MJPEG 2 Simultaneous Video Streams
- Support Surveon Video Intelligence
- Advanced ISP Function (WDR, ROI, 2D/3D De-noise, Edge Enhancement)
- PoE (IEEE 802.3af) and Day/Night IR-Cut Filter
- Built-in IR Illuminators, Effective Up to 10 Meters
- 3-Axis Support

Mechanical Drawing

Unit:mm(inches)

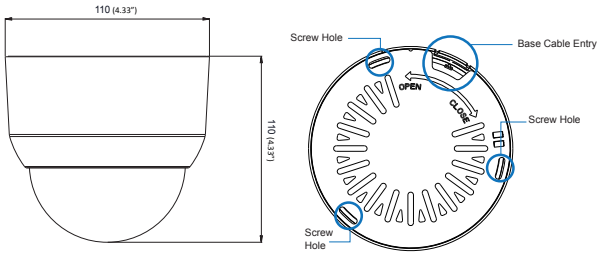

Technical Specifications

Model		CAM4411S2	CAM4411S3	CAM4411S4	CAM4411S6
Camera	Image Sensor	1/3" megapixel progressive scan CMOS			
	Lens	f2.8 mm, F1.8	f3.6 mm, F1.8	f4.2 mm, F1.8	f6.0 mm, F2.0
	SNR	48dB			
	WDR	Yes			
	Day/Night ICR	Yes			
	IR LED	Yes (10M)			
	Min Illumination	0.01 Lux @ F1.8 (B/W) / 0.1 Lux @ F1.8 (Color)			
	Iris Control	Fixed			
	Shutter Time	1/1 ~ 1/10,000 s			
	Viewing Angle	4411S2: Diagonal: 128°, Horizontal: 98°, Vertical:81.5° 4411S3: Diagonal: 100°, Horizontal: 78°, Vertical: 62.5° 4411S4: Diagonal: 89°, Horizontal: 71°, Vertical: 49.5° 4411S6: Diagonal: 60.5°, Horizontal: 52.4°, Vertical: 29°			
	Camera Angle Adjustment	Pan 0º ~340º, Tilt 20º ~90º, Rotate ±170º			
	Pan/Tilt/Zoom Functionalities	N/A			
Video	Video Compression	H.264/MPEG-4/MJPEG			
	Resolution	Up to 2048 x 1536			
	Frame Rate	25 fps at QXGA (2048 x 1536), 30 fps at 1080P (1920 x 1080), 30 fps at SXGA (1280 x 1024), 30 fps at HD720 (1280 x 720), 30 fps at D1 (720 x 480), 30 fps at VGA (640 x 480), 30 fps at QVGA (320 x 240)			
	Video Stream	Dual stream at H.264, MPEG-4, and MJPEG simultaneously			
	Bit Rate	32K ~ 10Mbps, VBR, CBR, controller frame rate and +quality			
	Video Control	AGC (Auto Gain Control), AWB (Auto White Balance), AES (Auto Electronic Shutter), BLC (Back Light Compensation), WDR, 2D/3D De-noise, ROI, Edge Enhancement, image adjustment			
	Intelligent Video	Motion detection, tampering detection (blocked, redirected, defocused, or spray-painted)			
	Video Jack	N/A			
Audio	Built-in MIC	Yes			
	Audio Compression	16KHz, ADPCM/G.711			
	Audio Input/Output	3.5mm phone jack (optional)			
I/O and Event Management	Alarm In	1, terminal block (optional)			
	Alarm Out	1, terminal block (optional)			
	Video Buffer	5 second pre-alarm, 30 second post-alarm			
	Event Action	Send snapshot or video clip by FTP or email, record to NAS, record to local storage, trigger DO			
Network	Supported Protocols	IPv4, IPv6, ARP, TCP, UDP, ICMP, IGMP, DHCP, NTP, DDNS, SMTP, SNMP, FTP, HTTP, HTTPS, CIFS, PPPoE, UPnP, RTP, RTSP, RTCP, 3GPP, ONVIF, iSCSI			
	Ethernet	10/100 Base-T / RJ45			
System	Local Storage	microSD/SDHC x 1			
	RS-485	N/A			
	USB	N/A			
	SDK	Surveon SDK 2.0			
Viewing System	OS	Microsoft Windows 7/8			
	Browser	IE 8.x or above, Safari, Chrome (via IE Tab)			
	Software	Surveon VMS 2.5			
General	Temperature	Operation: -10°C ~ 50°C (14°F~122°F)			
	Humidity	5 to 90%			
	Power	PoE (IEEE 802.3af) with Class 3			
	Power Consumption	Max. 7W			
	Dimensions	ø110mm x 100mm (H)			
	Weight	Net: 345g, Gross: 585g			
	Certification	Safety: LVD, EMC: FCC, CE			
	Warranty	3 years			

CAM4421LV

3 Megapixel 3-Axis Day&Night Indoor Fixed Dome Network Camera



3-Axis

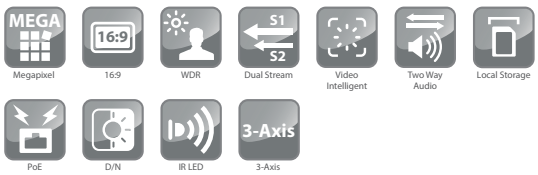

Features

- 3 Megapixel Progressive Scan Sensor
- Up to 2048 x 1536 Video Resolution
- H.264/MPEG4/MJPEG 2 Simultaneous Video Streams
- Support Surveon Video Intelligence
- Advanced ISP Function (WDR, ROI, Luminance Control, 2D/3D De-noise, Edge Enhancement, Lens Correction)
- PoE (IEEE 802.3af) and Day/Night IR-Cut Filter
- Built-in IR Illuminators, Effective Up to 20 Meters
- 3-Axis Support

Mechanical Drawing

Unit:mm(inches)

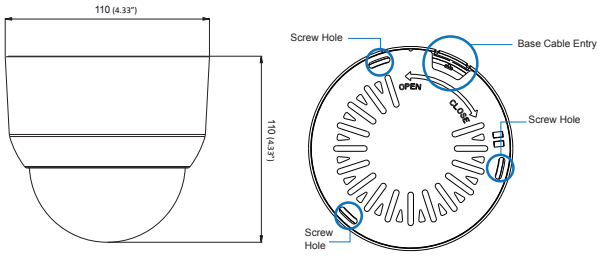

Technical Specifications

Model		CAM4421LV
Camera	Image Sensor	1/3" megapixel progressive scan CMOS
	Lens	f2.8 - 12 mm varifocal lens, F1.4
	SNR	48dB
	WDR	Yes
	Day/Night ICR	Yes
	IR LED	Yes (20M)
	Min Illumination	0.01 Lux @ F1.4 (B/W) 0.1 Lux @ F1.4 (Color)
	Iris Control	Auto Electronic Control
	Shutter Time	1/1 ~ 1/10,000 s
	Viewing Angle	Diagonal: 138°~40°, Horizontal: 95.5°~30.8° Vertical: 79°~23.3°
	Camera Angle Adjustment	Pan 0° ~340°, Tilt 20° ~90° Rotate ±110°
	Pan/Tilt/Zoom Functionalities	N/A
Video	Video Compression	H.264/MPEG-4/MJPEG
	Resolution	Up to 2048 x 1536
	Frame Rate	25 fps at QXGA (2048 x 1536) 30 fps at 1080P (1920 x 1080) 30 fps at SXGA (1280 x 1024) 30 fps at 720P (1280 x 720) 30 fps at D1 (720 x 480) 30 fps at VGA (640 x 480) 30 fps at QVGA (320 x 240)
	Video Stream	Dual stream at H.264, MPEG-4, and MJPEG simultaneously
	Bit Rate	32K ~ 10Mbps, VBR, CBR, controller frame rate and quality
	Video Control	AGC (Auto Gain Control), AWB (Auto White Balance), AES (Auto Electronic Shutter), BLC (Back Light Compensation), WDR, 2D/3D De-noise, ROI, Edge Enhancement, image adjustment
	Intelligent Video	Motion detection, tampering detection (blocked, redirected, defocused, or spray-painted)
	Video Jack	N/A
Audio	Built-in MIC	Yes
	Audio Compression	16KHz, ADPCM/G.711
	Audio Input/Output	3.5mm phone jack (optional)
I/O and Event Management	Alarm In	1, terminal block (optional)
	Alarm Out	1, terminal block (optional)
	Video Buffer	5 second pre-alarm, 30 second post-alarm
	Event Action	Send snapshot or video clip by FTP or email, record to NAS, trigger DO
Network	Supported Protocols	IPv4, IPv6, ARP, TCP, UDP, ICMP, IGMP, DHCP, NTP, DDNS, SMTP, SNMP, FTP, HTTP, HTTPS, CIFS, PPPoE, UPnP, RTP, RTSP, RTCP, 3GPP, ONVIF, iSCSI
	Ethernet	10/100 Base-T / RJ45
System	Local Storage	microSD/SDHC x 1 (Class 4/Class 6 only)
	RS-485	N/A
	USB	N/A
	SDK	Surveon SDK 2.0
Viewing System	OS	Microsoft Windows 7/8
	Browser	IE 8.x or above, Safari, Chrome (via IE Tab)
	Software	Surveon VMS 2.5
General	Temperature	Operation: -10°C ~ 50°C (14°F~122°F)
	Humidity	5 to 90%
	Power	PoE (IEEE 802.3af) with Class 3
	Power Consumption	Max. 7W
	Dimensions	ø110mm x 100mm (H)
	Weight	Net: 345g, Gross: 585g
	Certification	Safety: LVD, EMC: FCC, CE
	Warranty	3 years

CAM4521LV

5 Megapixel 3-Axis Day&Night Fixed Dome Network Camera



3-Axis



Features

- Megapixel Progressive Scan Sensor
- Up to 2560 x 1920 Video Resolution
- H.264/MPEG4/MJPEG 2 Simultaneous Video Streams
- Support Surveon Video Intelligence
- Advanced ISP Function (WDR, ROI, Luminance Control, 2D/3D De-noise, Edge Enhancement, Lens Correction)
- PoE (IEEE 802.3af) and Day/Night IR-Cut Filter
- Built-in IR Illuminators, Effective Up to 20 Meters
- 3-Axis Support

Mechanical Drawing

Unit:mm(inches)

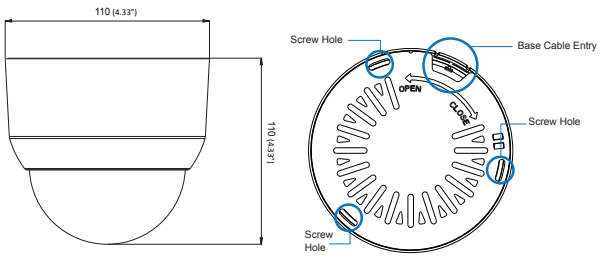

Technical Specifications

Model		CAM4521LV
Camera	Image Sensor	1/2.5" megapixel progressive scan CMOS
	Lens	f3-10.5 mm varifocal lens, F1.4
	SNR	48dB
	WDR	Yes
	Day/Night ICR	Yes
	IR LED	Yes(20m)
	Min Illumination	0.01 Lux @ F1.4 (B/W), 0.1 Lux @ F1.4 (Color)
	Iris Control	Auto Electronic Control
	Shutter Time	1/1 ~ 1/1,000,000 s
	Viewing Angle	Diagonal: 130°~38°, Horizontal: 108°~32°, Vertical: 58°~18°
	Camera Angle Adjustment	Pan 0° ~340°, Tilt 20° ~90°, Rotate ±110°
	Pan/Tilt/Zoom Functionalities	N/A
Video	Video Compression	H.264/MPEG-4/MJPEG
	Resolution	Up to 2560 x 1920
	Frame Rate	12 fps at QSXGA (2560 x 1920) 20 fps at QXGA (2048 x 1536) 30 fps at 1080P (1920 x 1080) 30 fps at SXGA (1280 x 1024) 30 fps at 720P (1280 x 720) 30 fps at D1 (720 x 480) 30 fps at VGA (640 x 480) 30 fps at QVGA (320 x 240)
	Video Stream	Dual stream at H.264, MPEG-4, and MJPEG simultaneously
	Bit Rate	32K ~ 10Mbps, VBR, CBR, controller frame rate and quality
	Video Control	AGC (Auto Gain Control), AWB (Auto White Balance), AES (Auto Electronic Shutter), Luminance Control, WDR, 2D/3D De-noise, ROI, Edge Enhancement, Lens Correction, image adjustment
	Intelligent Video	Motion detection, tampering detection (blocked, redirected, defocused, or spray-painted)
	Video Jack	N/A
Audio	Built-in MIC	Yes
	Audio Compression	16KHz, ADPCM/G.711
	Audio Input/Output	3.5mm phone jack (optional)
I/O and Event Management	Alarm In	1, terminal block (optional)
	Alarm Out	1, terminal block (optional)
	Video Buffer	5 second pre-alarm, 30 second post-alarm
	Event Action	Send snapshot or video clip by FTP or email, record to NAS, trigger DO
Network	Supported Protocols	IPv4, IPv6, ARP, TCP, UDP, ICMP, IGMP, DHCP, NTP, DDNS, SMTP, SNMP, FTP, HTTP, HTTPS, CIFS, PPPoE, UPnP, RTP, RTSP, RTCP, 3GPP, ONVIF, iSCSI
	Ethernet	10/100 Base-T / RJ45
System	Local Storage	microSD/SDHC x 1 (Class 4/Class 6 only)
	RS-485	N/A
	USB	N/A
	SDK	Surveon SDK 2.0
Viewing System	OS	Microsoft Windows XP/Vista/7
	Browser	IE 8.x or above, Safari, Chrome (via IE Tab)
	Software	Surveon VMS 2.5
General	Temperature	Operation: -10°C ~ 50°C (14°F~122°F)
	Humidity	5 to 90%
	Power	PoE (IEEE 802.3af) with Class 3
	Power Consumption	Max. 6.3W
	Dimensions	ø110mm x 100mm (H)
	Weight	Net: 345g, Gross: 585g
	Certification	Safety: LVD, EMC: FCC, CE
	Warranty	3 years

CAM4351R2

2 Megapixel 3-Axis Day&Night Outdoor Fixed Dome Network Camera



3-Axis

Exmor™ CMOS Sensor



Features

- 2 Megapixel Progressive Scan Sensor
- Up to 1920 x 1080 Video Resolution
- H.264/MPEG4/MJPEG 2 Simultaneous Video Streams
- Surveon Video Intelligent Ready
- Advanced ISP Function (WDR, ROI, Luminance Control, 2D/3D De-noise, Edge Enhancement, Lens Correction)
- PoE (IEEE 802.3af) and Day/Night IR-Cut Filter
- Built-in IR Illuminators, Effective Up to 10 Meters
- IP67 and Vandal Proof for Outdoor Application
- 3-Axis Support

Mechanical Drawing

Unit:mm(inches)

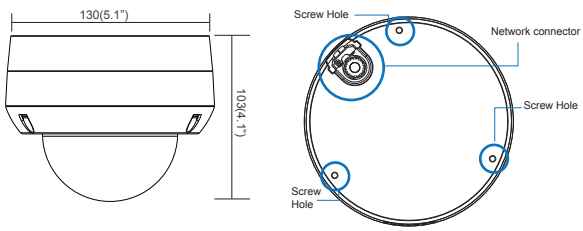

Technical Specifications

Model		CAM4351R2
Camera	Image Sensor	1/2.9" megapixel SONY Exmor CMOS
	Lens	f2.8 mm, F1.8
	SNR	48dB
	WDR	Yes
	Day/Night ICR	Yes
	IR LED	Yes (10M)
	Min Illumination	0.01 Lux @ F1.8 (B/W), 0.1 Lux @ F1.8 (Color)
	Iris Control	Fixed
	Shutter Time	1/1 ~ 1/1,000,000 s
	Viewing Angle	Diagonal: 135°, Horizontal: 105°, Vertical: 87°
	Camera Angle Adjustment	Pan 0° ~340° Tilt 20° ~90° Rotate ±170°
	Pan/Tilt/Zoom Functionalities	N/A
Video	Video Compression	H.264/MPEG-4/MJPEG
	Resolution	Up to 1920 x 1080
	Frame Rate	30 fps at 1080P (1920 x 1080) 30 fps at SXGA (1280 x 1024) 30 fps at HD720 (1280 x 720) 30 fps at D1 (720 x 480) 30 fps at VGA (640 x 480) 30 fps at QVGA (320 x 240)
	Video Stream	Dual stream at H.264, MPEG-4, and MJPEG simultaneously
	Bit Rate	32K ~ 10Mbps, VBR, CBR, controller frame rate and quality
	Video Control	AGC (Auto Gain Control), AWB (Auto White Balance), AES (Auto Electronic Shutter), Luminance Control, WDR, 2D/3D De-noise, ROI, Edge Enhancement, Lens Correction, Image Adjustment
	Intelligent Video	Motion detection, tampering detection (blocked, redirected, defocused, or spray-painted)
	Video Jack	N/A
Audio	Built-in MIC	N/A
	Audio Compression	N/A
	Audio Input/Output	N/A
I/O and Event Management	Alarm In	N/A
	Alarm Out	N/A
	Video Buffer	5 second pre-alarm, 30 second post-alarm
	Event Action	Send snapshot or video clip by FTP or email, record to NAS, trigger DO
Network	Supported Protocols	IPv4, IPv6, ARP, TCP, UDP, ICMP, IGMP, DHCP, NTP, DDNS, SMTP, SNMP, FTP, HTTP, HTTPS, CIFS, PPPoE, UPnP, RTP, RTSP, RTCP, 3GPP, ONVIF, iSCSI
	Ethernet	10/100 Base-T / RJ45
System	Local Storage	microSD/SDHC x 1 (Class 4/Class 6 only)
	RS-485	N/A
	USB	N/A
	SDK	Surveon SDK 2.0
Viewing System	OS	Microsoft Windows XP/Vista/7
	Browser	IE 8.x or above, Safari, Chrome (via IE Tab)
	Software	Surveon VMS 2.5
General	Temperature	Operation: -10°C ~ 50°C (14°F~122°F)
	Humidity	5 to 90%
	Power	PoE (IEEE 802.3af) with Class 3
	Power Consumption	Max. 6.5W (w/o Heater)
	Dimensions	ø130mm x 103mm (H)
	Weight	Net: 950g, Gross: 1550g
	Certification	Safety: LVD EMC: FCC, CE, IP67, IK10
	Warranty	3 years

CAM4361LV

2 Megapixel 3-Axis Day&Night Outdoor Fixed Dome Network Camera



3-Axis Exmor™ CMOS Sensor

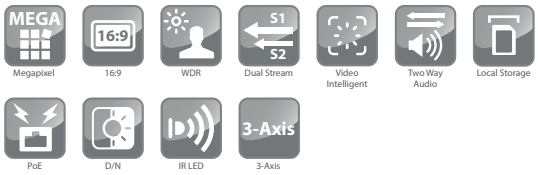

Features

- 2 Megapixel Progressive Scan Sensor
- Up to 1920 x 1080 Video Resolution
- H.264/MPEG4/MJPEG 2 Simultaneous Video Streams
- Support Surveon Video Intelligence
- Advanced ISP Function (WDR, ROI, Luminance Control, 2D/3D De-noise, Edge Enhancement, Lens Correction)
- PoE (IEEE 802.3af) and Day/Night IR-Cut Filter
- Built-in IR Illuminators, Effective Up to 20 Meters
- IP67 and Vandal Proof for Outdoor Application
- 3-Axis Support

Mechanical Drawing

Unit:mm(inches)

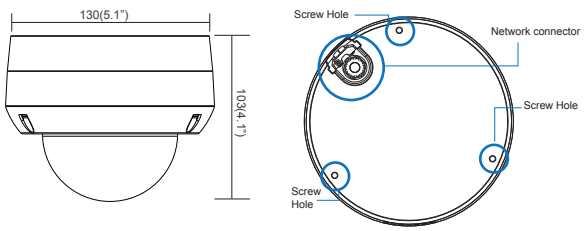

Technical Specifications

Model		CAM4361LV
Camera	Image Sensor	1/2.9" megapixel SONY Exmor CMOS
	Lens	f2.8-12 mm varifocal lens, F1.4
	SNR	48dB
	WDR	Yes
	Day/Night ICR	Yes
	IR LED	Yes(20m)
	Min Illumination	0.01 Lux @ F1.4 (B/W), 0.1 Lux @ F1.4 (Color)
	Iris Control	Auto Electronic Control
	Shutter Time	1/1 ~ 1/1,000,000 s
	Viewing Angle	Diagonal: 138°~40°, Horizontal: 95.5°~30.8°, Vertical: 79°~23.3°
	Camera Angle Adjustment	Pan 0° ~340° Tilt 20° ~90° Rotate ±110°
	Pan/Tilt/Zoom Functionalities	N/A
Video	Video Compression	H.264/MPEG-4/MJPEG
	Resolution	Up to 1920 x 1080
	Frame Rate	30 fps at 1080P (1920 x 1080) 30 fps at SXGA (1280 x 1024) 30 fps at HD720 (1280 x 720) 30 fps at D1 (720 x 480) 30 fps at VGA (640 x 480) 30 fps at QVGA (320 x 240)
	Video Stream	Dual stream at H.264, MPEG-4, and MJPEG simultaneously
	Bit Rate	32K ~ 10Mbps, VBR, CBR, controller frame rate and quality
	Video Control	AGC (Auto Gain Control), AWB (Auto White Balance), AES (Auto Electronic Shutter), Luminance Control, WDR, 2D/3D De-noise, ROI, Edge Enhancement, Lens Correction, image adjustment
	Intelligent Video	Motion detection, tampering detection (blocked, redirected, defocused, or spray-painted)
	Video Jack	N/A
Audio	Built-in MIC	N/A
	Audio Compression	N/A
	Audio Input/Output	N/A
I/O and Event Management	Alarm In	N/A
	Alarm Out	N/A
	Video Buffer	5 second pre-alarm, 30 second post-alarm
	Event Action	Send snapshot or video clip by FTP or email, record to NAS, trigger DO
Network	Supported Protocols	IPv4, IPv6, ARP, TCP, UDP, ICMP, IGMP, DHCP, NTP, DDNS, SMTP, SNMP, FTP, HTTP, HTTPS, CIFS, PPPoE, UPnP, RTP, RTSP, RTCP, 3GPP, ONVIF, iSCSI
	Ethernet	10/100 Base-T / RJ45
System	Local Storage	microSD/SDHC x 1 (Class 4/Class 6 only)
	RS-485	N/A
	USB	N/A
	SDK	Surveon SDK 2.0
Viewing System	OS	Microsoft Windows XP/Vista/7
	Browser	IE 8.x or above, Safari, Chrome (via IE Tab)
	Software	Surveon VMS 2.5
General	Temperature	Operation: -10°C ~ 50°C (14°F~122°F)
	Humidity	5 to 90%
	Power	PoE (IEEE 802.3af) with Class 3
	Power Consumption	Max. 7W (w/o Heater)
	Dimensions	ø130mm x 103mm (H)
	Weight	Net: 965g, Gross: 1565g
	Certification	Safety: LVD EMC: FCC, CE, IP67, IK10
	Warranty	3 years

CAM4371HEM/HEV

2 Megapixel Outdoor Fixed Dome Network Camera



Exmor™ CMOS Sensor

P-iris

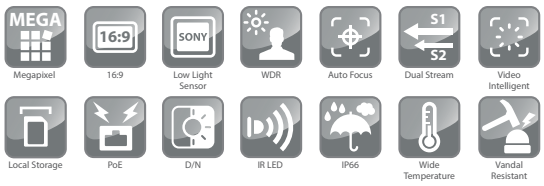

Features

- 2 Megapixel SONY Exmor Sensor
- Up to 1920x1080 60 FPS Video Resolution
- H.264/MPEG4/MJPEG 2 Simultaneous Video Streams
- Support Surveon Video Intelligence
- MicroSD/SDHC Local Storage for Alarm Capture
- PoE (IEEE 802.3af) and Day/Night ICR
- P-iris & 3x Zoom Auto Focus
- Advanced ISP Function (WDR, ROI, 2D/3D De-noise, Edge Enhancement)
- Built-in IR Illuminators, Effective Up to 30 Meters
- IP66, Wide Temperature, and Vandal Proof for Outdoor Application

Unit:mm(inches)

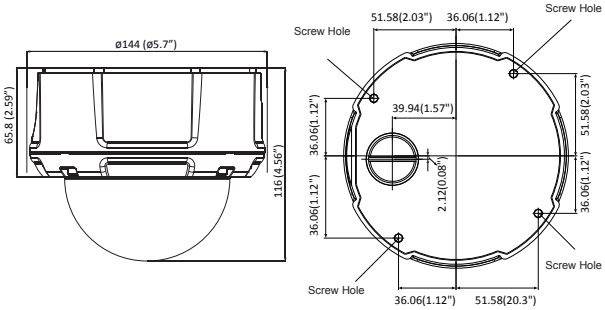

Technical Specifications

Model		CAM4371HEM	CAM4371HEV
Camera	Image Sensor	1/2.9" megapixel SONY Exmor CMOS	
	Lens	f3-10.5 mm auto focus lens, F1.4	f3-10.5 mm varifocal lens, F1.4
	SNR	50dB	
	WDR	Yes (True WDR 120dB)	
	Day/Night ICR	Yes	
	IR LED	Yes (Max. 30M on limited shutter)	
	Min Illumination	0.005 Lux @ F1.4 (B/W) 0.05 Lux @ F1.4 (Color)	
	Iris Control	P-Iris	
	Shutter Time	1/1 ~ 1/10,000 s	
	Viewing Angle	Diagonal: 130° ~ 38° Horizontal: 108° ~ 32° Vertical: 58° ~ 18°	
	Camera Angle Adjustment	Pan 0° ~340° Tilt 30° ~90°	
	Pan/Tilt/Zoom Functionalities	N/A	
Video	Video Compression	H.264/MPEG-4/MJPEG	
	Resolution	Up to 1920 x 1080	
	Frame Rate	60 fps at 1080P (1920 x 1080) 60 fps at SXGA (1280 x 1024) 60 fps at HD720 (1280 x 720) 60 fps at D1 (720 x 480) 60 fps at VGA (640 x 480) 60 fps at QVGA (320 x 240)	
	Video Stream	Dual stream at H.264, MPEG-4, and MJPEG simultaneously	
	Bit Rate	32K ~ 10Mbps, VBR, CBR, controller frame rate and quality	
	Video Control	AGC (Auto Gain Control), AWB (Auto White Balance), AES (Auto Electronic Shutter), BLC (Back Light Compensation), WDR, 2D/3D De-noise, ROI, Edge Enhancement, image adjustment	
	Intelligent Video	Motion detection, tampering detection (blocked, redirected, defocused, or spray-painted)	
	Video Jack	Yes (BNC, 4371HEV)	
Audio	Built-in MIC	N/A	
	Audio Compression	16KHz, ADPCM/G.711	
	Audio Input/Output	3.5mm phone jack (optional)	
I/O and Event Management	Alarm In	1, terminal block (optional)	
	Alarm Out	1, terminal block (optional)	
	Video Buffer	5 second pre-alarm, 30 second post-alarm	
	Event Action	Send snapshot or video clip by FTP or email, record to NAS, record to local storage, trigger DO	
Network	Supported Protocols	IPv4, IPv6, ARP, TCP, UDP, ICMP, IGMP, DHCP, NTP, DDNS, SMTP, SNMP, FTP, HTTP, HTTPS, CIFS, PPPoE, UPnP, RTP, RTSP, RTCP, 3GPP, ONVIF, iSCSI	
	Ethernet	10/100 Base-T / RJ45	
System	Local Storage	microSD/SDHC x 1	
	RS-485	N/A	
	USB	N/A	
	SDK	Surveon SDK 2.0	
Viewing System	OS	Microsoft Windows 7/8	
	Browser	IE 8.x or above, Safari, Chrome (via IE Tab)	
	Software	Surveon VMS 2.5	
General	Temperature	Operation: -40°C~ 50°C (-40°F~122°F)	
	Humidity	5 to 90%	
	Power	12VDC 1.5A ; PoE (IEEE 802.3af) with Class 3	
	Power Consumption	Max. 10.2W (w/ PoE & Heater off) Max. 17W (w/ DC Power & Heater on)	
	Dimensions	ø144mm x 116mm (H) ø5.67" x 4.57"(H)	
	Weight	Net: 1,260g (2.78lb.), Gross: 1,930g (4.27lb.)	
	Certification	Safety: LVD, EMC: FCC, CE, IP66, IK10	
	Warranty	3 years	

CAM4461LV

3 Megapixel 3-Axis Day&Night Outdoor Fixed Dome Network Camera



3-Axis



Features

- Megapixel Progressive Scan Sensor
- Up to 2048 x 1536 Video Resolution
- H.264/MPEG4/MJPEG 2 Simultaneous Video Streams
- Support Surveon Video Intelligence
- Advanced ISP Function (WDR, ROI, Luminance Control, 2D/3D De-noise, Edge Enhancement, Lens Correction)
- PoE (IEEE 802.3af) and Day/Night IR-Cut Filter
- Built-in IR Illuminators, Effective Up to 20 Meters
- IP67 and Vandal Proof for Outdoor Application
- 3-Axis Support

Mechanical Drawing

Unit:mm(inches)

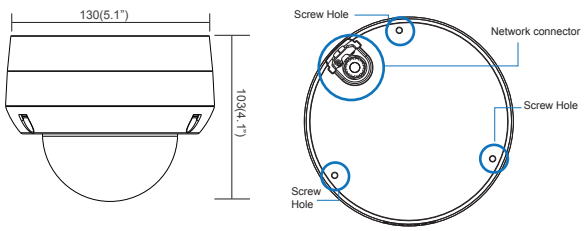

Technical Specifications

Model		CAM4461LV
Camera	Image Sensor	1/2.5" megapixel progressive scan CMOS
	Lens	f3-10.5 mm varifocal lens, F1.4
	SNR	48dB
	WDR	Yes
	Day/Night ICR	Yes
	IR LED	Yes(20m)
	Min Illumination	0.01 Lux @ F1.4 (B/W), 0.1 Lux @ F1.4 (Color)
	Iris Control	Auto Electronic Control
	Shutter Time	1/1 ~ 1/1,000,000 s
	Viewing Angle	Diagonal: 130°~38°, Horizontal: 108°~32°, Vertical: 58°~18°
	Camera Angle Adjustment	Pan 0° ~340° Tilt 20° ~90° Rotate ±110°
	Pan/Tilt/Zoom Functionalities	N/A
Video	Video Compression	H.264/MPEG-4/MJPEG
	Resolution	Up to 2048 x 1536
	Frame Rate	20 fps at QXGA (2048 x 1536) 30 fps at 1080P (1920 x 1080) 30 fps at SXGA (1280 x 1024) 30 fps at 720P (1280 x 720) 30 fps at D1 (720 x 480) 30 fps at VGA (640 x 480) 30 fps at QVGA (320 x 240)
	Video Stream	Dual stream at H.264, MPEG-4, and MJPEG simultaneously
	Bit Rate	32K ~ 10Mbps, VBR, CBR, controller frame rate and quality
	Video Control	AGC (Auto Gain Control), AWB (Auto White Balance), AES (Auto Electronic Shutter), Luminance Control, WDR, 2D/3D De-noise, ROI, Edge Enhancement, Lens Correction, image adjustment
	Intelligent Video	Motion detection, tampering detection (blocked, redirected, defocused, or spray-painted)
	Video Jack	N/A
Audio	Built-in MIC	N/A
	Audio Compression	N/A
	Audio Input/Output	N/A
I/O and Event Management	Alarm In	N/A
	Alarm Out	N/A
	Video Buffer	5 second pre-alarm, 30 second post-alarm
	Event Action	Send snapshot or video clip by FTP or email, record to NAS, trigger DO
Network	Supported Protocols	IPv4, IPv6, ARP, TCP, UDP, ICMP, IGMP, DHCP, NTP, DDNS, SMTP, SNMP, FTP, HTTP, HTTPS, CIFS, PPPoE, UPnP, RTP, RTSP, RTCP, 3GPP, ONVIF, iSCSI
	Ethernet	10/100 Base-T / RJ45
System	Local Storage	microSD/SDHC x 1 (Class 4/Class 6 only)
	RS-485	N/A
	USB	N/A
	SDK	Surveon SDK 2.0
Viewing System	OS	Microsoft Windows XP/Vista/7
	Browser	IE 8.x or above, Safari, Chrome (via IE Tab)
	Software	Surveon VMS 2.5
General	Temperature	Operation: -10°C ~ 50°C (14°F~122°F)
	Humidity	5 to 90%
	Power	PoE (IEEE 802.3af) with Class 3
	Power Consumption	Max. 8W (w/o Heater)
	Dimensions	ø130mm x 103mm (H)
	Weight	Net: 965g, Gross: 1565g
	Certification	Safety: LVD, EMC: FCC, CE, IP67,IK10
	Warranty	3 years

CAM4471HEM/HEV

3 Megapixel Real Time HDR Day&Night Fixed Dome Network Camera



HDR P-iris



Features

- 3 Megapixel Progressive Scan Sensor
- Up to 2048x1536 30PFS & 1920x1080 60FPS
- H.264/MPEG4/MJPEG 2 Simultaneous Video Streams
- Support Surveon Video Intelligence
- Advanced ISP Function (HDR, ROI, 2D/3D De-noise, Edge Enhancement)
- PoE (IEEE 802.3af) and Day/Night IR-Cut Filter
- P-iris & 3x Zoom Auto Focus
- Built-in IR Illuminators, Effective Up to 30 Meters
- IP66, Wide Temperature, and Vandal Proof for Outdoor Application

Mechanical Drawing

Unit:mm(inches)

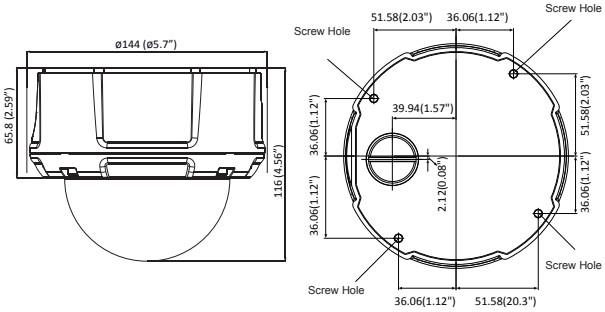

Technical Specifications

Model		CAM4471HEM	CAM4471HEV
Camera	Image Sensor	1/3" megapixel progressive scan CMOS	
	Lens	f3-10.5 mm auto focus lens, F1.4	f3-10.5 mm varifocal lens, F1.4
	SNR	50dB	
	WDR	Yes (HDR, 120 dB)	
	Day/Night ICR	Yes	
	IR LED	Yes (Max. 30M on limited shutter)	
	Min Illumination	0.01 Lux @ F1.2 (B/W) 0.1 Lux @ F1.2 (Color)	
	Iris Control	P-Iris	
	Shutter Time	1/1 ~ 1/10,000 s	
	Viewing Angle	Diagonal: 130° ~ 38° Horizontal: 108° ~ 32° Vertical: 58° ~ 18°	
	Camera Angle Adjustment	Pan 0° ~340° Tilt 30° ~90°	
	Pan/Tilt/Zoom Functionalities	N/A	
Video	Video Compression	H.264/MPEG-4/MJPEG	
	Resolution	Up to 2048 x 1536	
	Frame Rate	30 fps at QXGA (2048 x 1536) 60 fps at 1080P (1920 x 1080) 60 fps at SXGA (1280 x 1024) 60 fps at 720P (1280 x 720) 60 fps at D1 (720 x 480) 60 fps at VGA (640 x 480) 60 fps at QVGA (320 x 240)	
	Video Stream	Dual stream at H.264, MPEG-4, and MJPEG simultaneously	
	Bit Rate	32K ~ 20Mbps, VBR, CBR, controller frame rate and quality	
	Video Control	AGC (Auto Gain Control), AWB (Auto White Balance), AES (Auto Electronic Shutter), BLC (Back Light Compensation), HDR, 2D/3D De-noise, ROI, Edge Enhancement, Image Adjustment	
	Intelligent Video	Motion detection, tampering detection (blocked, redirected, defocused, or spray-painted)	
	Video Jack	Yes (BNC, 4471HEV)	
Audio	Built-in MIC	N/A	
	Audio Compression	16KHz, ADPCM/G.711	
	Audio Input/Output	3.5mm phone jack (optional)	
I/O and Event Management	Alarm In	1, terminal block (optional)	
	Alarm Out	1, terminal block (optional)	
	Video Buffer	5 second pre-alarm, 30 second post-alarm	
	Event Action	Send snapshot or video clip by FTP or email, record to NAS, record to local storage, trigger DO	
Network	Supported Protocols	IPv4, IPv6, ARP, TCP, UDP, ICMP, IGMP, DHCP, NTP, DDNS, SMTP, SNMP, FTP, HTTP, HTTPS, CIFS, PPPoE, UPnP, RTP, RTSP, RTCP, 3GPP, ONVIF, iSCSI	
	Ethernet	10/100 Base-T / RJ45	
System	Local Storage	microSD/SDHC x 1	
	RS-485	N/A	
	USB	N/A	
	SDK	Surveon SDK 2.0	
Viewing System	OS	Microsoft Windows 7/8	
	Browser	IE 8.x or above, Safari, Chrome (via IE Tab)	
	Software	Surveon VMS 2.5	
General	Temperature	Operation: -40°C~ 50°C (-40°F~122°F)	
	Humidity	5 to 90%	
	Power	12VDC 1.5A ; PoE (IEEE 802.3af) with Class 3	
	Power Consumption	Max. 9W (w/o Heater), Max. 27W (w/ Heater & DC Power)	
	Dimensions	ø144mm x 116mm (H) /ø5.67" x 4.57"(H)	
	Weight	Net: 1,260g (2.78lb.), Gross: 1,930g (4.27lb.)	
	Certification	Safety: LVD, EMC: FCC, CE, IP66, IK10	
	Warranty	3 years	

CAM4471HI

3 Megapixel Video Analytics Outdoor Fixed Dome Network Camera



3-Axis HDR P-iris



Features

- Megapixel Progressive Scan HDR Sensor
- Up to 2048x1536 30FPS & 1920x1080 60FPS
- H.264/MPEG4/MJPEG 2 Simultaneous Video Streams
- Advanced Video Analytics (Optical Diagnosis, Object Loitering Detection, Motion Direction Detection, Entering/ Leaving Detection, Object Counting)
- Advanced ISP Function (HDR, ROI, 2D/3D De-noise, Edge Enhancement)
- PoE (IEEE 802.3af) and Day/Night IR-Cut Filter
- P-iris & 3x Zoom Auto Focus
- Built-in IR Illuminators, Effective Up to 30 Meters
- IP66, Wide Temperature, and Vandal Proof for Outdoor Application

Mechanical Drawing

Unit:mm(inches)

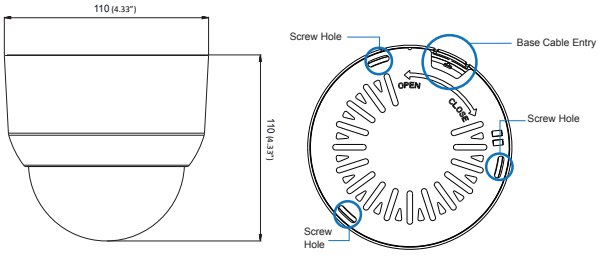

Technical Specifications

Model		CAM4471HI
Camera	Image Sensor	1/3" megapixel progressive scan CMOS
	Lens	f3-10.5 mm auto focus lens, F1.4
	SNR	50dB
	WDR	Yes (HDR, 120 dB)
	Day/Night ICR	Yes
	IR LED	Yes (Max. 30M on limited shutter)
	Min Illumination	0.01 Lux @ F1.4 (B/W), 0.1 Lux @ F1.4 (Color)
	Iris Control	P-Iris
	Shutter Time	1/1 ~ 1/10,000 s
	Viewing Angle	DIAGONAL: 130° ~ 38° , HORIZONTAL: 108° ~ 32° VERTICAL: 58° ~ 18°
	Camera Angle Adjustment	Pan 0° ~340° Tilt 30° ~90°
	Pan/Tilt/Zoom Functionalities	N/A
Video	Video Compression	H.264/MPEG-4/MJPEG
	Resolution	Up to 2048 x 1536
	Frame Rate	30 fps at QXGA (2048 x 1536) 60 fps at 1080P (1920 x 1080) 60 fps at SXGA (1280 x 1024) 60 fps at 720P (1280 x 720) 60 fps at D1 (720 x 480) 60 fps at VGA (640 x 480) 60 fps at QVGA (320 x 240)
	Video Stream	Dual stream at H.264, MPEG-4, and MJPEG simultaneously
	Bit Rate	32K ~ 20Mbps, VBR, CBR, controller frame rate and quality
	Video Control	AGC (Auto Gain Control), AWB (Auto White Balance), AES (Auto Electronic Shutter), BLC (Back Light Compensation), HDR, 2D/3D De-noise, ROI, Edge Enhancement, image adjustment
	Intelligent Video	Motion detection, tampering detection (blocked, redirected, defocused, or spray-painted)
	Video Analytics	Optical Diagnosis, Object Loitering Detection, Object Motion Direction Detection, Area - Entering or Leaving Detection, Object Counting by Wire (directional) or Area (in/out)
	Video Jack	N/A
Audio	Built-in MIC	N/A
	Audio Compression	16KHz, ADPCM/G.711
	Audio Input/Output	3.5mm phone jack (optional)
I/O and Event Management	Alarm In	1, terminal block (optional)
	Alarm Out	1, terminal block (optional)
	Video Buffer	5 second pre-alarm, 30 second post-alarm
	Event Action	Send snapshot or video clip by FTP or email, record to NAS, trigger DO
Network	Supported Protocols	IPv4, IPv6, ARP, TCP, UDP, ICMP, IGMP, DHCP, NTP, DDNS, SMTP, SNMP, FTP, HTTP, HTTPS, CIFS, PPPoE, UPnP, RTP, RTSP, RTCP, 3GPP, ONVIF, iSCSI
	Ethernet	10/100 Base-T / RJ45
System	Local Storage	microSD/SDHC x 1 (Class 4/Class 6 only)
	RS-485	N/A
	USB	N/A
	SDK	Surveon SDK 2.0
Viewing System	OS	Microsoft Windows 7/8
	Browser	IE 8.x or above, Safari, Chrome (via IE Tab)
	Software	Surveon VMS 2.5
General	Temperature	Operation: -40°C~ 50°C (-40°F~122°F)
	Humidity	5 to 90%
	Power	12VDC 1.5A; PoE (IEEE 802.3af) with Class 3
	Power Consumption	Max. 10.2W (w/ PoE & Heater off) Max. 17W (w/ DC Power & Heater on)
	Dimensions	ø144mm x 116mm (H), ø5.67" x 4.57"(H)
	Weight	Net: 1,260g (2.78lb.), Gross: 1,930g (4.27lb.)
	Certification	Safety: LVD, EMC: FCC, CE, IP66, IK10
	Warranty	3 years

CAM4561LV

5 Megapixel 3-Axis Day&Night Outdoor Fixed Dome Network Camera



3-Axis



Features

- Megapixel Progressive Scan Sensor
- Up to 2560 x 1920 Video Resolution
- H.264/MPEG4/MJPEG 2 Simultaneous Video Streams
- Support Surveon Video Intelligence
- Advanced ISP Function (WDR, ROI, Luminance Control, 2D/3D De-noise, Edge Enhancement, Lens Correction)
- PoE (IEEE 802.3af) and Day/Night IR-Cut Filter
- Built-in IR Illuminators, Effective Up to 20 Meters
- IP67 and Vandal Proof for Outdoor Application
- 3-Axis Support

Mechanical Drawing

Unit:mm(inches)

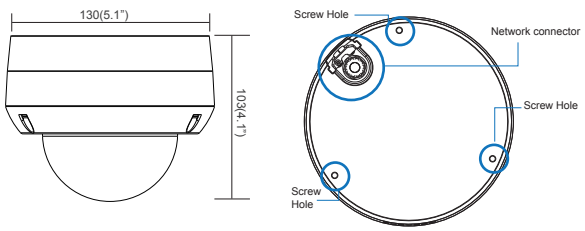

Technical Specifications

Model		CAM4561LV
Camera	Image Sensor	1/2.5" megapixel progressive scan CMOS
	Lens	f3-10.5 mm varifocal lens, F1.4
	SNR	48dB
	WDR	Yes
	Day/Night ICR	Yes
	IR LED	Yes(20m)
	Min Illumination	0.01 Lux @ F1.4 (B/W), 0.1 Lux @ F1.4 (Color)
	Iris Control	Auto Electronic Control
	Shutter Time	1/1 ~ 1/1,000,000 s
	Viewing Angle	Diagonal: 130°~38°, Horizontal: 108°~32°, Vertical: 58°~18°
	Camera Angle Adjustment	Pan 0° ~340°, Tilt 20° ~90°, Rotate ±110°
	Pan/Tilt/Zoom Functionalities	N/A
Video	Video Compression	H.264/MPEG-4/MJPEG
	Resolution	Up to 2560 x 1920
	Frame Rate	12 fps at QSXGA (2560 x 1920) 20 fps at QXGA (2048 x 1536) 30 fps at 1080P (1920 x 1080) 30 fps at SXGA (1280 x 1024) 30 fps at 720P (1280 x 720) 30 fps at D1 (720 x 480) 30 fps at VGA (640 x 480) 30 fps at QVGA (320 x 240)
	Video Stream	Dual stream at H.264, MPEG-4, and MJPEG simultaneously
	Bit Rate	32K ~ 10Mbps, VBR, CBR, controller frame rate and quality
	Video Control	AGC (Auto Gain Control), AWB (Auto White Balance), AES (Auto Electronic Shutter), Luminance Control, WDR, 2D/3D De-noise, ROI, Edge Enhancement, Lens Correction, image adjustment
	Intelligent Video	Motion detection, tampering detection (blocked, redirected, defocused, or spray-painted)
	Video Jack	N/A
Audio	Built-in MIC	N/A
	Audio Compression	N/A
	Audio Input/Output	N/A
I/O and Event Management	Alarm In	N/A
	Alarm Out	N/A
	Video Buffer	5 second pre-alarm, 30 second post-alarm
	Event Action	Send snapshot or video clip by FTP or email, record to NAS, trigger DO
Network	Supported Protocols	IPv4, IPv6, ARP, TCP, UDP, ICMP, IGMP, DHCP, NTP, DDNS, SMTP, SNMP, FTP, HTTP, HTTPS, CIFS, PPPoE, UPnP, RTP, RTSP, RTCP, 3GPP, ONVIF, iSCSI
	Ethernet	10/100 Base-T / RJ45
System	Local Storage	microSD/SDHC x 1 (Class 4/Class 6 only)
	RS-485	N/A
	USB	N/A
	SDK	Surveon SDK 2.0
Viewing System	OS	Microsoft Windows XP/Vista/7
	Browser	IE 8.x or above, Safari, Chrome (via IE Tab)
	Software	Surveon VMS 2.5
General	Temperature	Operation: -10°C ~ 50°C (14°F~122°F)
	Humidity	5 to 90%
	Power	PoE (IEEE 802.3af) with Class 3
	Power Consumption	Max. 8W (w/o Heater)
	Dimensions	ø130mm x 103mm (H)
	Weight	Net: 965g, Gross: 1565g
	Certification	Safety: LVD, EMC: FCC, CE, IP67,IK10
	Warranty	3 years

CAM4571M/MP/VP

5 Megapixel Auto Focus Day&Night Outdoor Fixed Dome Network Camera



P-Iris



Features

- 5 Megapixel Progressive Scan Sensor
- Up to 2560 x 1920 Video Resolution
- H.264/MPEG4/MJPEG 2 Simultaneous Video Streams
- Support Surveon Video Intelligence
- Advanced ISP Function (WDR, ROI, Luminance Control, 2D/3D De-noise, Edge Enhancement, Lens Correction)
- PoE (IEEE 802.3af) and Day/Night IR-Cut Filter
- Built-in IR Illuminators, Effective Up to 30 Meters
- IP66, Wide Temperature, and Vandal Proof for Outdoor Application
- 2x Optical Zoom with Auto Focus (CAM4571M/4571MP)

Mechanical Drawing

Unit:mm(inches)

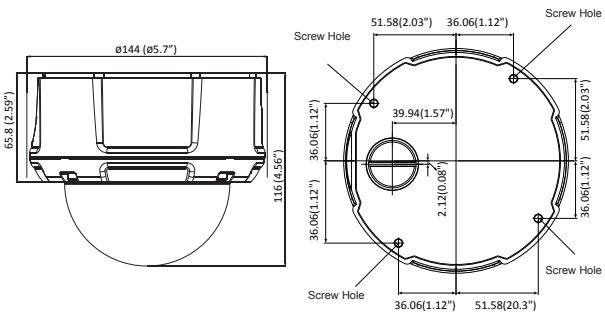

Technical Specifications

Model		CAM4571M	CAM4571MP	CAM4571VP
Camera	Image Sensor	1/2.5" megapixel progressive scan CMOS		
	Lens	4.5 - 9 mm auto focus lens, F1.2	4.5 - 9 mm auto focus lens, F1.2	3.3 - 10.5 mm varifocal lens, F1.4
	SNR	48dB		
	WDR	Yes		
	Day/Night ICR	Yes		
	IR LED	Yes (Max 30M, on 1/1 Exposure)		
	Min Illumination	0.01 Lux @ F1.2 (B/W), 0.1 Lux @ F1.2 (Color)		
	Iris Control	DC drive	P-Iris	P-Iris
	Shutter Time	1/1 ~ 1/1,000,000 s		
	Viewing Angle	Diagonal: 98.5°-43.8° Horizontal: 80.5°-38.1° Vertical: 41.3° - 21.3°	Diagonal: 98.5°-43.8° Horizontal: 80.5°-38.1° Vertical: 41.3° - 21.3°	Diagonal: 126° - 40° Horizontal: 98° - 32° Vertical: 72° - 24°
	Camera Angle Adjustment	Pan 0º ~340º Tilt 30º ~90º		
	Pan/Tilt/Zoom Functionalities	N/A		
Video	Video Compression	H.264/MPEG-4/MJPEG		
	Resolution	Up to 2560 x 1920		
	Frame Rate	14 fps at QSXGA (2560 x 1920), 21 fps at QXGA (2048 x 1536), 30 fps at 1080P (1920 x 1080), 30 fps at SXGA (1280 x 1024), 30 fps at 720P (1280 x 720), 30 fps at D1 (720 x 480) 30 fps at VGA (640 x 480),30 fps at QVGA (320 x 240)		
	Video Stream	Dual stream at H.264, MPEG-4, and MJPEG simulataneously		
	Bit Rate	32K ~ 20Mbps, VBR, CBR, controller frame rate and quality		
	Video Control	AGC (Auto Gain Control), AWB (Auto White Balance), AES (Auto Electronic Shutter), Luminance Control, WDR, 2D/3D De-noise, ROI, Edge Enhancement, Lens Correction, Image Adjustment		
	Intelligent Video	Motion detection, tampering detection (blocked, redirected, defocused, or spray-painted)		
	Video Jack	Yes (BNC, 4571VP)		
Audio	Built-in MIC	N/A		
	Audio Compression	16KHz, ADPCM/G.711		
	Audio Input/Output	3.5mm phone jack (optional)		
I/O and Event Management	Alarm In	1, terminal block (optional)		
	Alarm Out	1, terminal block (optional)		
	Video Buffer	5 second pre-alarm, 30 second post-alarm		
	Event Action	Send snapshot or video clip by FTP or email, record to NAS, record to local storage, trigger DO		
Network	Supported Protocols	IPv4, IPv6, ARP, TCP, UDP, ICMP, IGMP, DHCP, NTP, DDNS, SMTP, SNMP, FTP, HTTP, HTTPS, CIFS, PPPoE, UPnP, RTP, RTSP, RTCP, 3GPP, ONVIF, iSCSI		
	Ethernet	10/100 Base-T / RJ45		
System	Local Storage	microSD/SDHC x 1 (Class 4/Class 6 only)		
	RS-485	N/A		
	USB	N/A		
	SDK	Surveon SDK 2.0		
Viewing System	OS	Microsoft Windows XP/Vista/7		
	Browser	IE 8.x or above, Safari, Chrome (via IE Tab)		
	Software	Surveon VMS 2.5		
General	Temperature	Operation: -40°C~ 50°C (-40°F~122°F) Storage: -30°C ~ 60°C (-22°F~140°F)		
	Humidity	5 to 90%		
	Power	12VDC 1.5A ; PoE (IEEE 802.3af) with Class 3		
	Power Consumption	Max. 7W (w/o Heater) Max. 15.4W (w/ Heater & PoE 802.3af)		
	Dimensions	ø144mm x 116mm (H) / ø5.67" x 4.57"(H)		
	Weight	Net: 1,260g (2.78lb.) / Gross: 1,930g (4.27lb.)		
	Certification	Safety: LVD ; EMC: FCC, CE, GOST, IP66, IK10		
	Warranty	3 years		

CAM5321S4

2 Megapixel Day&Night PT Dome Network Camera



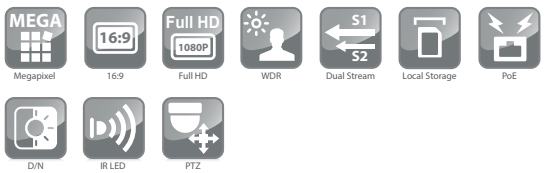

Features

- 2 Megapixel Progressive Scan Sensor
- Up to 1920 x 1080 Video Resolution
- H.264/MPEG4/MJPEG 2 Simultaneous Video Streams
- Advanced ISP Function (WDR, ROI*, 3D De-noise)
- MicroSD Local Storage for Alarm Capture
- PoE (IEEE 802.3af) and Day/Night ICR Filter
- Built-in IR Illuminators, Effective Up to 10 Meters

Technical Specifications

Model		CAM5321S4
Camera	Image Sensor	1/2.7" megapixel progressive scan CMOS
	Lens	4.0 mm, F2.0
	SNR	48dB
	WDR	Yes
	Day/Night ICR	Yes
	IR LED	Yes (10M)
	Min Illumination	0.1 Lux @ F2.0 (B/W) 0.5 Lux @ F2.0 (Color)
	Iris Control	Fixed
	Shutter Time	1/30 ~ 1/50,000 s
	Viewing Angle	Diagonal: 62°
	Camera Angle Adjustment	Pan : 200° Tilt : 70°
	Pan/Tilt/Zoom Functionalities	Support auto tracking function, Support multi- direction movement
Video	Video Compression	H.264/MPEG-4/MJPEG
	Resolution	Up to 1920 x 1080
	Frame Rate	30 fps at 1080P (1920 x 1080) 30 fps at SXGA (1280 x 1024) 30 fps at WXGA (1280 x 800) 30 fps at VGA (640 x 480) 30 fps at QVGA (320 x 240)
	Video Stream	Dual stream at H.264, MPEG-4, and MJPEG simultaneously
	Bit Rate	64K ~ 10Mbps, VBR, CBR, controller frame rate and quality
	Video Control	AGC (Auto Gain Control), AWB (Auto White Balance), AES (Auto Electronic Shutter), WDR, 3D De-noise, ROI*, Image Adjustment
	Intelligent Video	Motion detection
	Video Jack	N/A
Audio	Built-in MIC	Yes
	Audio Compression	G.711/AMR/AAC
	Audio Input/Output	N/A
I/O and Event Management	Alarm In	N/A
	Alarm Out	N/A
	Video Buffer	N/A
	Event Action	Send snapshot or video clip by email, record to local storage
Network	Supported Protocols	TCP/IP, HTTP, SMTP, FTP, DDNS, UPnP, Telnet, NTP, PPPoE, DNS, DHCP, RTSP, Samba, ONVIF, iSCSI
	Ethernet	10/100 Base-T / RJ45
System	Local Storage	microSD x 1 (Class 4/Class 6 only)
	RS-485	N/A
	USB	N/A
	SDK	Surveon SDK 2.0
Viewing System	OS	Microsoft Windows XP/Vista/Win7/Win8
	Browser	IE 8.x or above, Safari, Chrome (via IE Tab)
	Software	Surveon VMS 2.5
General	Temperature	Operation: 0°C~ 40°C (32°F~104°F)
	Humidity	85% RH
	Power	12VDC 1.5A; PoE (IEEE 802.3af) with Class 3
	Power Consumption	Max. 8W
	Dimensions	Height : 63mm, Diameter : 92mm
	Weight	NET. 400g
	Certification	EMI & Safety: CE, FCC
	Warranty	2 years

CAM5330SZ

2 Megapixel 10x Zoom PTZ Dome Network Camera





Features

- 2 Megapixel Progressive Scan Sensor
- Up to 1920 x 1080 Video Resolution
- H.264/MPEG4/MJPEG 2 Simultaneous Video Streams
- Advanced ISP Function (WDR, ROI*, 3D De-noise)
- SD Local Storage for Alarm Capture
- Power over Ethernet (IEEE 802.3af)
- 10X Optical Zoom and Auto Focus

Technical Specifications

Model		CAM5330SZ
Camera	Image Sensor	1/2.7" megapixel progressive scan CMOS
	Lens	f4.9~ 49mm autofocus lens, F1.8~3.0
	SNR	48dB
	WDR	Yes
	Day/Night ICR	N/A
	IR LED	N/A
	Min Illumination	0.1 Lux @ F2.0 (B/W) 0.5 Lux @ F2.0 (Color)
	Iris Control	DC Drive
	Shutter Time	1/30 ~ 1/50,000 s
	Viewing Angle	Diagonal: 66.6° ~ 7.2°
	Camera Angle Adjustment	Pan : 390°(-195°~195°)±1°, Pan speed : 1~200°/Sec Tilt : 95°(-5°~ 90°)±1°, Tilt speed : 1~120°/Sec
	Pan/Tilt/Zoom Functionalities	10x optical zoom , 4x digital zoom (Smart focus / Auto focus / Step focus), Support auto tracking function, Support multi - direction movement
Video	Video Compression	H.264/MPEG-4/MJPEG
	Resolution	Up to 1920 x 1080
	Frame Rate	30 fps at 1080P (1920 x 1080) 30 fps at SXGA (1280 x 1024) 30 fps at WXGA (1280 x 800) 30 fps at VGA (640 x 480) 30 fps at QVGA (320 x 240)
	Video Stream	Dual stream at H.264, MPEG-4, and MJPEG simultaneously
	Bit Rate	64K ~ 10Mbps, VBR, CBR, controller frame rate and quality
	Video Control	AGC (Auto Gain Control), AWB (Auto White Balance), AES (Auto Electronic Shutter), WDR, 3D De-noise, ROI*, Image Adjustment
	Intelligent Video	Motion detection
	Video Jack	Video out x1
Audio	Built-in MIC	N/A
	Audio Compression	G.711/AMR/AAC
	Audio Input/Output	3.5mm phone jack
I/O and Event Management	Alarm In	1, terminal block
	Alarm Out	1, terminal block
	Video Buffer	N/A
	Event Action	Send snapshot or video clip by email, record to local storage
Network	Supported Protocols	TCP/IP, HTTP, SMTP, FTP, DDNS, UPnP, Telnet, NTP, PPPoE, DNS, DHCP, RTSP, Samba, ONVIF, iSCSI
	Ethernet	10/100 Base-T / RJ45
System	Local Storage	SD Card slot x 1
	RS-485	N/A
	USB	USB 2.0 x 1
	SDK	Surveon SDK 2.0
Viewing System	OS	Microsoft Windows XP/Vista/Win7/Win8
	Browser	IE 8.x or above, Safari, Chrome (via IE Tab)
	Software	Surveon VMS 2.5
General	Temperature	Operation: 0°C~ 40°C (32°F~104°F)
	Humidity	85% RH
	Power	12VDC 1.5A; PoE (IEEE 802.3af) with Class 3
	Power Consumption	Max. 10W
	Dimensions	Height : 128mm, Diameter : 130mm
	Weight	NET. 960g
	Certification	EMI & Safety: CE, FCC
	Warranty	2 years

CAM6181

36x Zoom Day&Night Outdoor Speed Dome Network Camera





Features

- 1/4" D1 SONY CCD Sensor
- Up to 720 x 480 Video Resolution
- H.264/MJPEG 2 Simultaneous Video Streams
- Motion Detection & Surveon Video Intelligent
- Day/Night Function with IR-Cut Filter
- 36X Optical Zoom and Auto Focus
- IP66, Wide Temperature, and Vandal Proof for Outdoor Application
- Support Auto Tracking Function (Optional)

Mechanical Drawing

Unit:mm(inches)

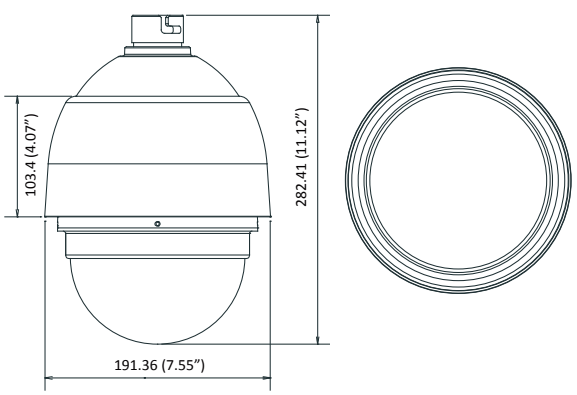

Technical Specifications

Model		CAM6181
Camera	Image Sensor	1/4" D1 Sony CCD
	Lens	3.4 - 122.4 mm autofocus lens, F1.6 (wide) - F4.5 (tele)
	SNR	50dB
	WDR	Yes
	Day/Night ICR	Yes
	IR LED	N/A
	Min Illumination	0.01 Lux @ F1.6 (B/W) / 0.1 Lux @ F1.6 (Color)
	Iris Control	Automatic / Manual IRIS control
	Shutter Time	1/1 ~ 1/10,000 s
	Viewing Angle	57.8° (Wide); 1.70° (Tele)
	Camera Angle Adjustment	Pan: 360° endless, 5°–400°/s Tilt: -10° ~ +190°, 5°–400°/s
	Pan/Tilt/Zoom Functionalities	1. 180° Horizontal Instant Flip 2. 256 preset positions 3. Preset position auto scanning 4. 36x optical zoom and 12x digital zoom, total 432x zoom 5. Auto Tracking Function (Optional)
Video	Video Compression	H.264/MJPEG
	Resolution	Up to 720 x 480 / 650 TV Lines
	Frame Rate	30 fps at D1 (720 x 480) 30 fps at QVGA (352 x 240)
	Video Stream	Dual stream at H.264 and MJPEG simulataneously
	Bit Rate	64K ~ 10Mbps, VBR, CBR, controller frame rate and quality
	Video Control	AGC (Auto Gain Control), AWB (Auto White Balance), AES (Auto Electronic Shutter), BLC (Back Light Compensation), WDR, image adjustment
	Intelligent Video	Motion detection
	Video Jack	N/A
Audio	Built-in MIC	N/A
	Audio Compression	G711/G.726
	Audio Input/Output	Line In/Out, terminal block
I/O and Event Management	Alarm In	4, terminal block
	Alarm Out	2, terminal block
	Video Buffer	N/A
	Event Action	Send snapshot or video clip by FTP or email, record to local storage, trigger DO
Network	Supported Protocols	IPv4/v6, TCP/IP, UDP, RTP, RTSP, HTTP, HTTPS, ICMP, FTP, SMTP, DHCP, PPPoE, UPnP, IGMP, SNMP, QoS, IEEE 802.1X, ONVIF, DDNS, NTP, iSCSI
	Ethernet	10/100 Base-T / RJ45
System	Local Storage	microSDHC x 1 (Class 4/Class 6 only)
	RS-485	N/A
	USB	N/A
	SDK	Surveon SDK 2.0
Viewing System	OS	Microsoft Windows XP/Vista/7
	Browser	IE 8.x or above, Safari, Chrome (via IE Tab)
	Software	Surveon VMS 2.5
General	Temperature	Operation: -40°C~ 50°C (-40°F~122°F)
	Humidity	0 to 90%
	Power	AC24V ; HPoE 30W
	Power Consumption	Max. 20W (w/o Heater) / Max. 50W (w/ Heater)
	Dimensions	ø192mm x 282mm (H) / ø7.55" x 11.1" (H)
	Weight	Net: 2.32kg / Gross: 3.55kg
	Certification	LVD, FCC, CE, IP66, IK10
	Warranty	2 years

CAM6351

20x Zoom Full HD Day&Night Outdoor Speed Dome Network Camera



Exmor™ CMOS Sensor

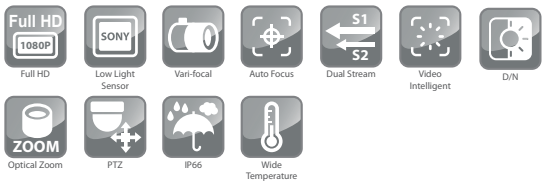

Features

- Full HD & Real Time Network Camera
- 2 Megapixel SONY Progressive Scan Sensor
- Up to 1920 x 1080 Video Resolution
- H.264/MJPEG 2 Simultaneous Video Streams
- Motion Detection & Surveon Video Intelligent
- Day/Night Function with IR-Cut Filter
- 20X Optical Zoom and Auto Focus
- IP66, Wide Temperature, and Vandal Proof for Outdoor Application
- Support Auto Tracking Function (Optional)

Mechanical Drawing

Unit:mm(inches)

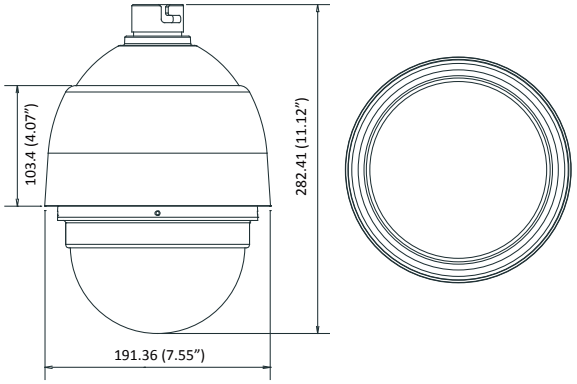

Technical Specifications

Model		CAM6351
Camera	Image Sensor	1/2.8" megapixel SONY low light CMOS
	Lens	4.7 - 94 mm autofocus lens, F1.6 (wide) - F3.7 (tele)
	SNR	48dB
	WDR	Yes
	Day/Night ICR	Yes
	IR LED	N/A
	Min Illumination	0.01 Lux @ F1.6 (B/W) / 0.1 Lux @ F1.6 (Color)
	Iris Control	Automatic / Manual IRIS control
	Shutter Time	1/30 ~ 1/10,000 s
	Viewing Angle	55.2° (Wide); 2.93° (Tele)
	Camera Angle Adjustment	Pan: 360° endless, 5°–400°/s Tilt: -10° ~ +190°, 5°–400°/s
	Pan/Tilt/Zoom Functionalities	1. 180° Horizontal Instant Flip 2. 256 preset positions 3. Preset position auto scanning 4. 20x optical zoom and 8x digital zoom, total 160x zoom 5. Auto Tracking Function (Optional)
Video	Video Compression	H.264/MJPEG
	Resolution	Up to 1920 x 1080
	Frame Rate	30 fps at 1080P (1920 x 1080) 30 fps at SXGA (1280 x 1024) 60 fps at HD720 (1280 x 720) 60 fps at D1 (720 x 480) 60 fps at VGA (640 x 480) 60 fps at QVGA (320 x 240)
	Video Stream	Dual stream at H.264, MPEG-4, and MJPEG simulataneously
	Bit Rate	64K ~ 10Mbps, VBR, CBR, controller frame rate and quality
	Video Control	AGC (Auto Gain Control), AWB (Auto White Balance), BLC (Back Light Compensation), Image adjustment, Privacy zone: On/Off (16 zones)
	Intelligent Video	Motion detection
	Video Jack	N/A
Audio	Built-in MIC	N/A
	Audio Compression	G711/G.726
	Audio Input/Output	Line In/Out, terminal block
I/O and Event Management	Alarm In	4, terminal block
	Alarm Out	2, terminal block
	Video Buffer	N/A
	Event Action	Send snapshot or video clip by FTP or email, record to local storage, trigger DO
Network	Supported Protocols	IPv4/v6, TCP/IP, UDP, RTP, RTSP, HTTP, HTTPS, ICMP, FTP, SMTP, DHCP, PPPoE, UPnP, IGMP, SNMP, QoS, IEEE 802.1X, ONVIF, DDNS, NTP, iSCSI
	Ethernet	10/100 Base-T / RJ45
System	Local Storage	microSDHC x 1
	RS-485	N/A
	USB	N/A
	SDK	Surveon SDK 2.0
Viewing System	OS	Microsoft Windows XP/Vista/7
	Browser	IE 8.x or above, Safari, Chrome (via IE Tab)
	Software	Surveon VMS 2.5
General	Temperature	Operation: -40°C~ 50°C (-40°F~122°F)
	Humidity	0 to 90%
	Power	AC24V ; HPoE 30W
	Power Consumption	Max. 20W (w/o Heater) / Max. 65W (w/ Heater)
	Dimensions	ø192mm x 282mm (H) / ø7.55" x 11.1" (H)
	Weight	Net: 2.32kg / Gross: 3.55kg
	Certification	LVD, FCC, CE, GOST, KCC, IP66, IK10
	Warranty	2 years

CAM6351A

30x Zoom True WDR Day&Night Outdoor Speed Dome Network Camera



Exmor™ CMOS Sensor

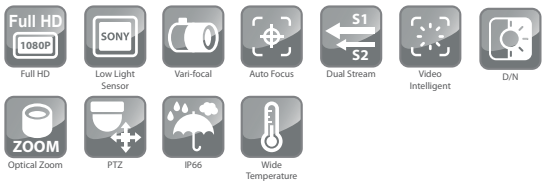

Features

- Full HD & Real Time Network Camera
- 2 Megapixel SONY Progressive Scan Sensor
- Up to 1920 x 1080 Video Resolution
- H.264/MJPEG 2 Simultaneous Video Streams
- Motion Detection & Surveon Video Intelligent (via NVR/VMS)
- Day/Night Function with IR-Cut Filter
- 30X Optical Zoom and Auto Focus (CAM6351B)
- IP66 and Wide Temperature for Outdoor Application
- Support Auto Tracking Function (Optional)

Mechanical Drawing

Unit:mm(inches)

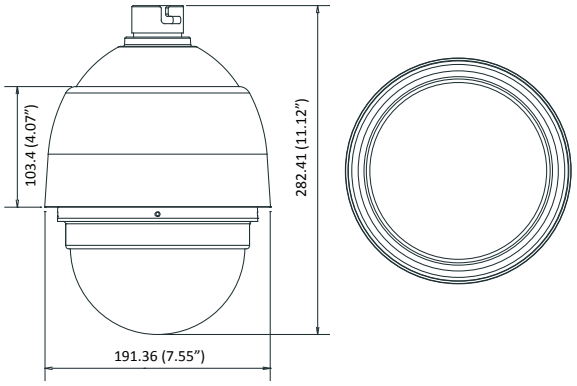

Technical Specifications

Model		CAM6351A
Camera	Image Sensor	1/2.9" megapixel SONY low light CMOS
	Lens	4.7 ~ 94 mm autofocus lens, F1.6 (wide) - F3.7 (tele)
	SNR	50dB
	WDR	Yes (True WDR >96dB)
	Day/Night ICR	Yes
	IR LED	N/A
	Min Illumination	0.1 Lux @ F1.6 (B/W) / 0.5 Lux @ F1.6 (Color)
	Iris Control	Automatic / Manual IRIS control
	Shutter Time	1/1 ~ 1/10,000 s
	Viewing Angle	55.2° (Wide); 2.93° (Tele)
	Camera Angle Adjustment	Pan: 360° endless, 5°–400°/s, Tilt: -10° ~ +190°, 5°–400°/s
	Pan/Tilt/Zoom Functionalities	1. 180° Horizontal Instant Flip 2. 256 preset positions 3. Preset position auto scanning 4. Preset / Sequence / Auto Pan / Cruise 5. Auto Tracking Function (Optional)
		20x optical zoom and 12x digital zoom, total 240x zoom
Video	Video Compression	H.264/MJPEG
	Resolution	Up to 1920 x 1080
	Frame Rate	30 fps at 1080P (1920 x 1080), 30 fps at SXGA (1280 x 1024), 60 fps at HD720 (1280 x 720), 60 fps at D1 (720 x 480), 60 fps at VGA (640 x 480), 60 fps at QVGA (320 x 240)
	Video Stream	Dual stream at H.264 and MJPEG simultaneously
	Bit Rate	64K ~ 10Mbps, VBR, CBR, controller frame rate and quality
	Video Control	AGC (Auto Gain Control), AWB (Auto White Balance), BLC (Back Light Compensation), 2D/3D Noise Reduction, Digital Image Stabilization, Image Defog Feature, Image adjustment, Privacy zone: On/Off (16 zones)
	Intelligent Video	Motion detection
	Video Jack	N/A
Audio	Built-in MIC	N/A
	Audio Compression	G711/G.726
	Audio Input/ Output	Line In/Out, terminal block
I/O and Event Management	Alarm In	4, terminal block
	Alarm Out	2, terminal block
	Video Buffer	N/A
	Event Action	Send snapshot or video clip by FTP or email, record to local storage, trigger DO
Network	Supported Protocols	IPv4/v6, TCP/IP, UDP, RTP, RTSP, HTTP, HTTPS, ICMP, FTP, SMTP, DHCP, PPPoE, UPnP, IGMP,SNMP, IEEE 802.1x, QoS, ONVIF, ARP, iSCSI
	Ethernet	10/100 Base-T / RJ45
System	Local Storage	microSDHC x 1 (32GB)
	RS-485	N/A
	USB	N/A
	SDK	Surveon SDK 2.0
Viewing System	OS	Microsoft Windows XP/Vista/7
	Browser	IE 8.x or above, Safari, Chrome (via IE Tab)
	Software	Surveon VMS 2.5
General	Temperature	Operation: -40°C~ 50°C (-40°F~122°F)
	Humidity	0 to 90%
	Power	802.3at PoE+ (60W) / AC 24V ± 10%
	Power Consumption	Max. 24W (w/o Heater) / Max. 60W (w/ Heater)
	Dimensions	ø192mm x 282mm (H) / ø7.55" x 11.1" (H)
	Weight	Net: 2.32kg / Gross: 3.55kg
	Certification	CE / FCC / RoHS / IP66
	Warranty	2 years

CAM6471EZ

30x Zoom Day&Night Outdoor Speed Dome Network Camera



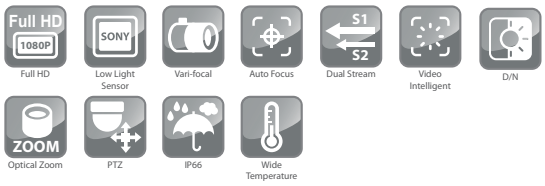

Features

- Megapixel SONY Progressive Scan Sensor
- Up to 2048x1536 30FPS Video Resolution
- H.264/MJPEG 2 Simultaneous Video Streams
- Motion Detection & Surveon Video Intelligent
- Day/Night Function with IR-Cut Filter
- 30X Optical Zoom and Auto Focus
- IP66 and Wide Temperature for Outdoor Application

Mechanical Drawing

Unit:mm(inches)

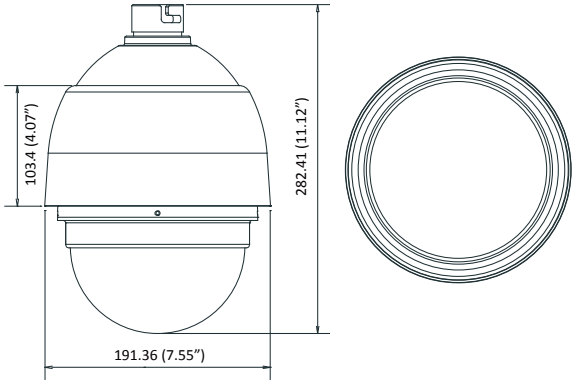

Technical Specifications

Model		CAM6471EZ
Camera	Image Sensor	1/2.8" megapixel Sony Progressive CMOS
	Lens	f4.4 - 132 mm autofocus lens, F1.4 (wide) - F4.7 (tele)
	SNR	50dB
	WDR	Yes
	Day/Night ICR	Yes
	IR LED	N/A
	Min Illumination	0.009 lux @ F1.4 (B/W) 0.04 lux @ F1.4 (Color)
	Iris Control	Automatic / Manual IRIS control
	Shutter Time	1/1 ~ 1/10,000 s
	Viewing Angle	57.02° (Wide); 2.15° (Tele)
	Camera Angle Adjustment	Pan: 360° endless, 5°–400°/s Tilt: -10° ~ +190°, 5°–400°/s
	Pan/Tilt/Zoom Functionalities	1. 180° Horizontal Instant Flip 2. 256 preset positions 3. Preset position auto scanning 4. 30x optical zoom and 10x digital zoom, total 300x zoom
Video	Video Compression	H.264/MJPEG
	Resolution	Up to 2048 x 1536
	Frame Rate	30 fps at QXGA (2048 x 1536) 60 fps at 1080P (1920 x 1080) 60 fps at SXGA (1280 x 1024) 60 fps at 720P (1280 x 720) 60 fps at D1 (720 x 480) 60 fps at VGA (640 x 480) 60 fps at QVGA (320 x 240)
	Video Stream	Dual stream at H.264 and MJPEG simultaneously
	Bit Rate	64K ~ 10Mbps, VBR, CBR, controller frame rate and quality
	Video Control	AGC (Auto Gain Control), AWB (Auto White Balance), BLC (Back Light Compensation), 2D/3D Noise Reduction, Digital Image Stabilization, Image Defog Feature, Image adjustment, Privacy zone: On/Off (16 zones)
	Intelligent Video	Motion detection
	Video Jack	N/A
Audio	Built-in MIC	N/A
	Audio Compression	G711/G.726
	Audio Input/Output	Line In, terminal block
I/O and Event Management	Alarm In	4, terminal block
	Alarm Out	2, terminal block
	Video Buffer	N/A
	Event Action	Send snapshot or video clip by FTP or email, record to local storage, trigger DO
Network	Supported Protocols	IPv4/v6, TCP/IP, UDP, RTP, RTSP, HTTP, HTTPS, ICMP, FTP, SMTP, DHCP, PPPoE, UPnP, IGMP, SNMP, QoS, IEEE 802.1X, ONVIF, DDNS, NTP, iSCSI
	Ethernet	RJ-45, 1Gbps Ethernet
System	Local Storage	microSDXC (64GB)
	RS-485	N/A
	USB	N/A
	SDK	Surveon SDK 2.0
Viewing System	OS	Microsoft Windows 7/8
	Browser	IE 8.x or above, Safari, Chrome (via IE Tab)
	Software	Surveon VMS 2.5
General	Temperature	Operation: -40°C~ 50°C (-40°F~122°F)
	Humidity	0 to 90%
	Power	802.3at PoE+ (60W) / AC 24V ± 20%
	Power Consumption	Max. 25W (w/o Heater) Max. 57W (w/ Heater)
	Dimensions	ø192mm x 282mm (H) ø7.5" x 11.1" (H)
	Weight	Net: 2.32kg Gross: 3.55kg
	Certification	CE / FCC / RoHS / IP66
	Warranty	2 years

CAM7510

5 Megapixel 360° Surround View Fisheye Network Camera



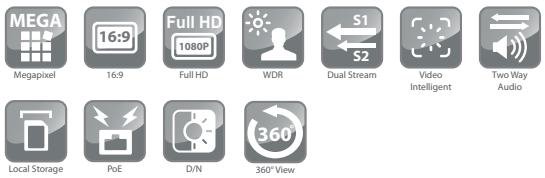

Features

- 5 Megapixel Progressive Scan Sensor
- Up to 2560 x 1920 Video Resolution
- H.264/MPEG4/MJPEG 2 Simultaneous Video Streams
- Support Surveon Video Intelligence
- MicroSD/SDHC Local Storage for Alarm Capture
- Power over Ethernet (IEEE 802.3af)
- Advanced ISP Function (HDR, ROI, Luminance Control, 2D/3D De-noise, Edge Enhancement, Lens Correction)
- 360° Surround View

Mechanical Drawing

Unit:mm(inches)

Hard Mount

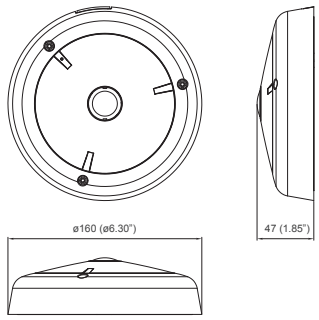

In Mount

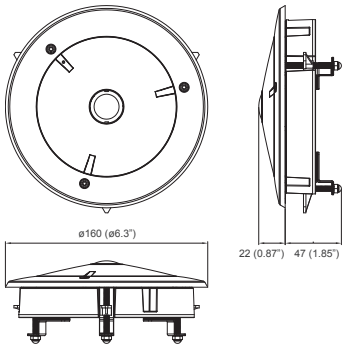

Technical Specifications

Model		CAM7510
Camera	Image Sensor	1/2.5" 5megapixel progressive scan CMOS
	Lens	f=1.27mm, F2.0
	SNR	48dB
	WDR	Yes
	Day/Night ICR	N/A
	IR LED	N/A
	Min Illumination	0.05 Lux @ F2.0 (B/W) / 0.5 Lux @ F2.0 (Color)
	Iris Control	Fixed
	Shutter Time	1/1 ~ 1/1,000,000 s
	Viewing Angle	Vertical: 185°
	Camera Angle Adjustment	N/A
	Pan/Tilt/Zoom Functionalities	N/A
Video	Video Compression	H.264/MPEG-4/MJPEG
	Resolution	Up to 2560 x 1920
	Frame Rate	14 fps at QSXGA (2560 x 1920) 21 fps at QXGA (2048 x 1536) 30 fps at 1080P (1920 x 1080) 30 fps at SXGA (1280 x 1024) 30 fps at 720P (1280 x 720) 30 fps at D1 (720 x 480) 30 fps at VGA (640 x 480) 30 fps at QVGA (320 x 240)
	Video Stream	Dual stream at H.264, MPEG-4, and MJPEG simultaneously
	Bit Rate	32K ~ 20Mbps, VBR, CBR, controller frame rate and quality
	Video Control	AGC (Auto Gain Control), AWB (Auto White Balance), AES (Auto Electronic Shutter), Luminance Control, 2D/3D De-noise, Edge Enhancement, Lens Correction, Image Adjustment
	Intelligent Video	Motion detection, tampering detection (blocked, redirected, defocused, or spray-painted)
	Video Jack	N/A
Audio	Built-in MIC	Yes
	Audio Compression	16KHz, ADPCM/G.711
	Audio Input/Output	3.5mm phone jack (optional)
I/O and Event Management	Alarm In	1, terminal block (optional)
	Alarm Out	1, terminal block (optional)
	Video Buffer	5 second pre-alarm, 30 second post-alarm
	Event Action	Send snapshot or video clip by FTP or email, record to NAS, record to local storage, trigger DO
Network	Supported Protocols	IPv4, ARP, TCP, UDP, ICMP, IGMP, DHCP, NTP, DDNS, SMTP, FTP, HTTP, CIFS, PPPoE, UPnP, RTP, RTSP, RTCP, 3GPP, ONVIF
	Ethernet	10/100 Base-T / RJ45
System	Local Storage	microSD/SDHC x 1
	RS-485	N/A
	USB	N/A
	SDK	Surveon SDK 2.0
Viewing System	OS	Microsoft Windows 7/8
	Browser	Microsoft IE 8.0 or above
	Software	Surveon VMS 2.5
General	Temperature	Operation: -10°C~ 50°C (14°F~122°F) Storage: -30°C ~ 60°C (-22°F~140°F)
	Humidity	5 to 90%
	Power	12VDC 1.5A ; PoE (IEEE 802.3af) with Class 3
	Power Consumption	Max. 5W
	Dimensions	Dim: Φ160mm x 47mm (H)
	Weight	Net: 490g
	Certification	Safety: LVD / EMC: FCC, CE
	Warranty	3 years

CAM7511

5 Megapixel 360° Surround View Fisheye Network Camera



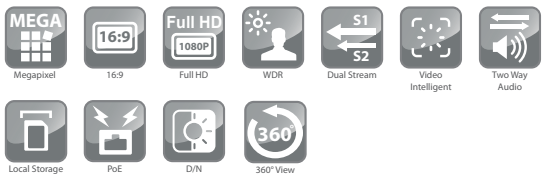

Features

- 5 Megapixel Progressive Scan Sensor
- Up to 2560 x 1920 Video Resolution
- H.264/MPEG4/MJPEG 2 Simultaneous Video Streams
- Support Surveon Video Intelligence
- MicroSD/SDHC Local Storage for Alarm Capture
- Day/Night Function with IR-Cut Filter
- Power over Ethernet (IEEE 802.3af)
- Advanced ISP Function (HDR, ROI, Luminance Control, 2D/3D De-noise, Edge Enhancement, Lens Correction)
- 360° Surround View

Mechanical Drawing

Unit:mm(inches)

Hard Mount

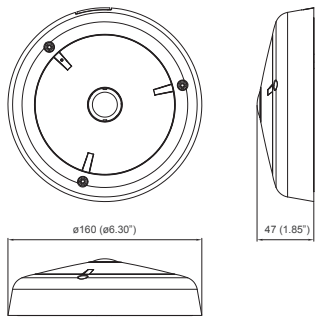

In Mount

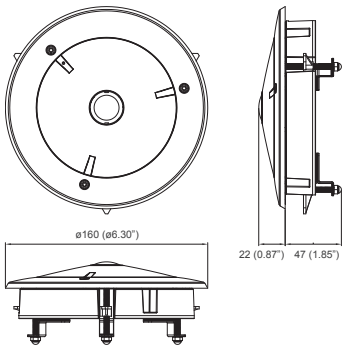

Technical Specifications

Model		CAM7511
Camera	Image Sensor	1/2.5" megapixel progressive scan CMOS
	Lens	f=1.05mm, F2.8
	SNR	48dB
	WDR	Yes
	Day/Night ICR	Yes
	IR LED	N/A
	Min Illumination	0.05 Lux @ F2.8 (B/W) / 0.5 Lux @ F2.8 (Color)
	Iris Control	Fixed
	Shutter Time	1/1 ~ 1/1,000,000 s
	Viewing Angle	Vertical: 180°
	Camera Angle Adjustment	N/A
	Pan/Tilt/Zoom Functionalities	N/A
Video	Video Compression	H.264/MPEG-4/MJPEG
	Resolution	Up to 2560 x 1920
	Frame Rate	14 fps at QSXGA (2560 x 1920) 21 fps at QXGA (2048 x 1536) 30 fps at 1080P (1920 x 1080) 30 fps at SXGA (1280 x 1024) 30 fps at 720P (1280 x 720) 30 fps at D1 (720 x 480) 30 fps at VGA (640 x 480) 30 fps at QVGA (320 x 240)
	Video Stream	Dual stream at H.264, MPEG-4, and MJPEG simulataneously
	Bit Rate	32K ~ 20Mbps, VBR, CBR, controller frame rate and quality
	Video Control	AGC (Auto Gain Control), AWB (Auto White Balance), AES (Auto Electronic Shutter), Luminance Control, WDR, 2D/3D De-noise, ROI, Edge Enhancement, Lens Correction, Image Adjustment
	Intelligent Video	Motion detection, tampering detection (blocked, redirected, defocused, or spray-painted)
	Video Jack	N/A
Audio	Built-in MIC	Yes
	Audio Compression	16KHz, ADPCM/G.711
	Audio Input/Output	3.5mm phone jack (optional)
I/O and Event Management	Alarm In	1, terminal block (optional)
	Alarm Out	1, terminal block (optional)
	Video Buffer	5 second pre-alarm, 30 second post-alarm
	Event Action	Send snapshot or video clip by FTP or email, record to NAS, record to local storage, trigger DO
Network	Supported Protocols	IPv4, IPv6, ARP, TCP, UDP, ICMP, IGMP, DHCP, NTP, DDNS, SMTP, SNMP, FTP, HTTP, HTTPS, CIFS, PPPoE, UPnP, RTP, RTSP, RTCP, 3GPP, ONVIF, iSCSI
	Ethernet	10/100 Base-T / RJ45
System	Local Storage	microSD/SDHC x 1 (Class 4/Class 6 only)
	RS-485	N/A
	USB	N/A
	SDK	Surveon SDK 2.0
Viewing System	OS	Microsoft Windows XP/Vista/7
	Browser	IE 8.x or above, Safari, Chrome (via IE Tab)
	Software	Surveon VMS 2.5
General	Temperature	Operation: -10°C~ 50°C (14°F~122°F) Storage: -30°C ~ 60°C (-22°F~140°F)
	Humidity	5 to 90%
	Power	12VDC 1.5A ; PoE (IEEE 802.3af) with Class 3
	Power Consumption	Max. 5W
	Dimensions	Dim: Φ145mm x 47mm (H)
	Weight	Net: 490g
	Certification	Safety: LVD / EMC: FCC, CE, GOST
	Warranty	3 years

CAM4571RF

5 Megapixel 360° Surround View Outdoor Fisheye Network Camera



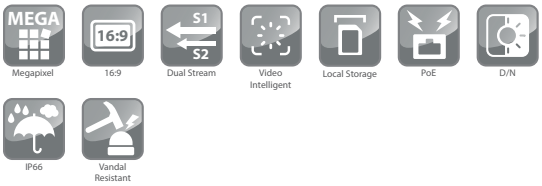

Features

- 5 Megapixel Progressive Scan Sensor
- Up to 2560 x 1920 Video Resolution
- H.264/MPEG4/MJPEG 2 Simultaneous Video Streams
- Surveon Video Intelligent Ready
- MicroSD/SDHC Local Storage for Alarm Capture
- Day/Night Function with IR-Cut Filter
- Power over Ethernet (IEEE 802.3af)
- Advanced ISP Function (HDR, ROI, Luminance Control, 2D/3D De-noise, Edge Enhancement, Lens Correction)
- 360° Surround View
- IP66 for Outdoor Application

Mechanical Drawing

Unit:mm(inches)

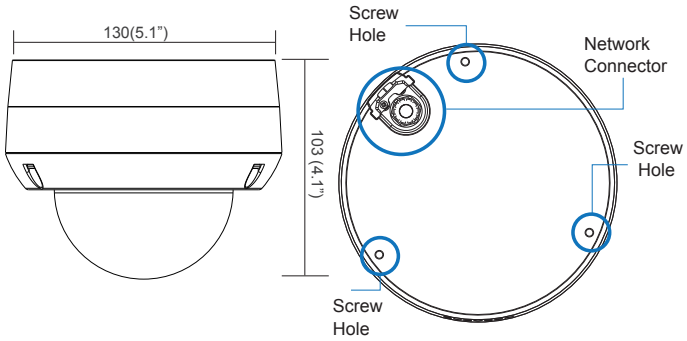

Technical Specifications

Model		CAM4571RF
Camera	Image Sensor	1/2.5" megapixel progressive scan CMOS
	Lens	f=1.37mm, F2.0
	SNR	48dB
	WDR	Yes
	Day/Night ICR	Yes
	IR LED	N/A
	Min Illumination	0.05 Lux @ F2.8 (B/W) 0.5 Lux @ F2.0 (Color)
	Iris Control	Fixed
	Shutter Time	1/1 ~ 1/1,000,000 s
	Viewing Angle	Vertical: 183°
	Camera Angle Adjustment	N/A
	Pan/Tilt/Zoom Functionalities	N/A
Video	Video Compression	H.264/MPEG-4/MJPEG
	Resolution	Up to 2560 x 1920
	Frame Rate	12 fps at QSXGA (2560 x 1920) 20 fps at QXGA (2048 x 1536) 30 fps at 1080P (1920 x 1080) 30 fps at SXGA (1280 x 1024) 30 fps at 720P (1280 x 720) 30 fps at D1 (720 x 480) 30 fps at VGA (640 x 480) 30 fps at QVGA (320 x 240)
	Video Stream	Dual stream at H.264, MPEG-4, and MJPEG simultaneously
	Bit Rate	32K ~ 10Mbps, VBR, CBR, controller frame rate and quality
	Video Control	AGC (Auto Gain Control), AWB (Auto White Balance), AES (Auto Electronic Shutter), Luminance Control, WDR, 2D/3D De-noise, ROI, EdgeEnhancement, Lens Correction, Image Adjustment
	Intelligent Video	Motion detection, tampering detection (blocked, redirected, defocused, or spray-painted)
	Video Jack	N/A
Audio	Built-in MIC	N/A
	Audio Compression	N/A
	Audio Input/Output	N/A
I/O and Event Management	Alarm In	N/A
	Alarm Out	N/A
	Video Buffer	5 second pre-alarm, 30 second post-alarm
	Event Action	Send snapshot or video clip by FTP or email, record to NAS, trigger DO
Network	Supported Protocols	IPv4, IPv6, ARP, TCP, UDP, ICMP, IGMP, DHCP, NTP, DDNS, SMTP, SNMP, FTP, HTTP, HTTPS, CIFS, PPPoE, UPnP, RTP, RTSP, RTCP, 3GPP, ONVIF, iSCSI
	Ethernet	10/100 Base-T / RJ45
System	Local Storage	microSD/SDHC x 1
	RS-485	N/A
	USB	N/A
	SDK	Surveon SDK 2.0
Viewing System	OS	Microsoft Windows XP/Vista/7
	Browser	IE 8.x or above, Safari, Chrome (via IE Tab)
	Software	Surveon VMS 2.5
General	Temperature	Operation: -10°C ~ 50°C (14°F~122°F)
	Humidity	5 to 90%
	Power	PoE (IEEE 802.3af) with Class 3
	Power Consumption	Max. 5W
	Dimensions	ø130mm x 103mm (H)
	Weight	Net: 965g, Gross: 1565g
	Certification	Safety: LVD EMC: FCC, CE, IP67,IK10
	Warranty	3 years

Surveon
Complete Megapixel Solutions

Network Video Recorder

- Scalable Client-Server Architecture
- Optimized for Megapixel Recording
- Industrial-Grade Components
- In-house Design & Production



Key Features and Core Technology

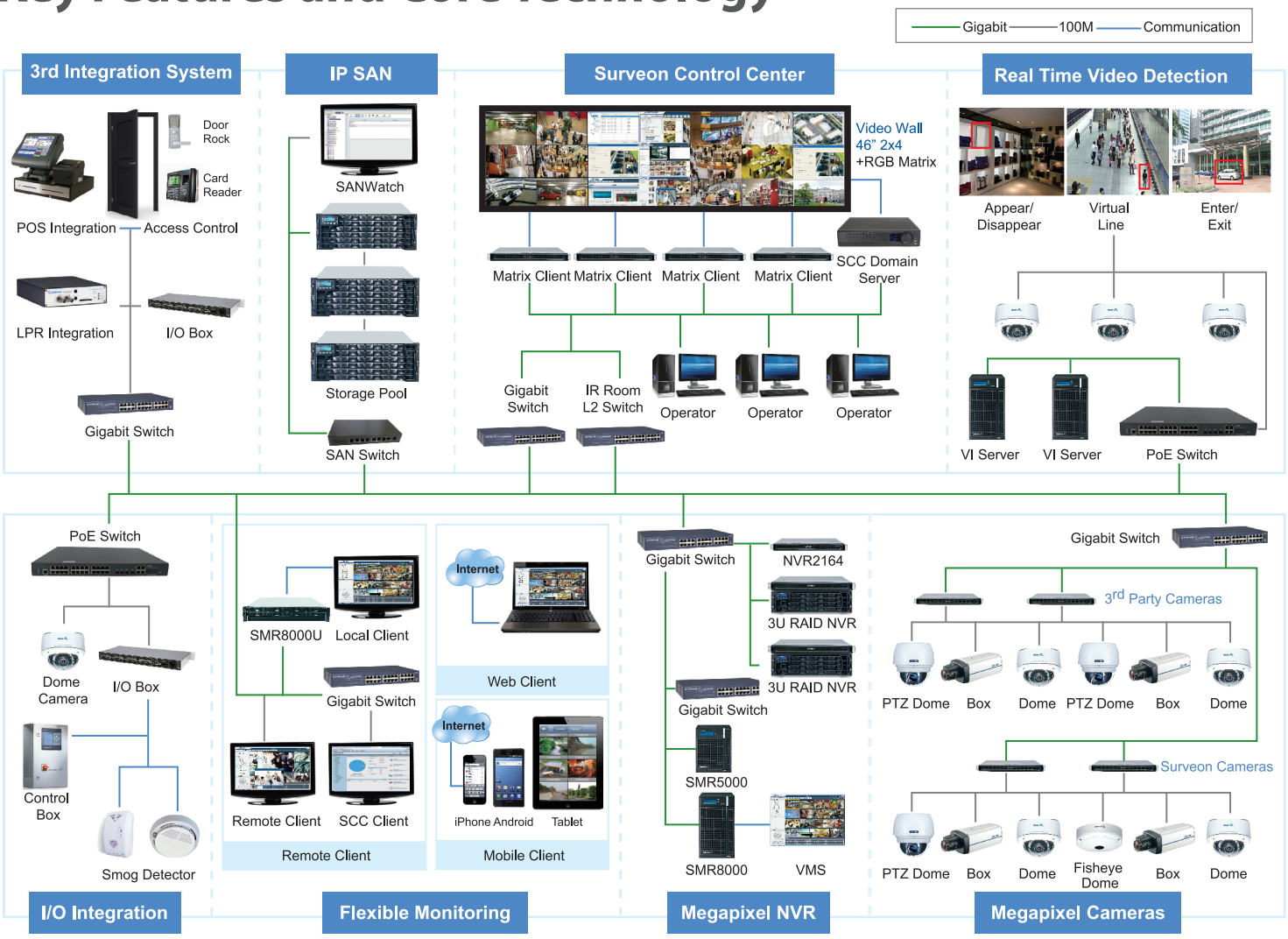

Client-Server, High Scalable Architecture

Surveon surveillance solutions support the unlimited number of cameras, users, NVRs and storage systems in one single domain architecture, providing SI an easy deployment for up to 3000+ cameras and 180 days recording. With one single login to access multiple NVRs at any remote location, Surveon's centralized management allows a simple control over camera configurations, NVRs, and user authorities.

Unifying and Intuitive Monitoring Station

Surveon provides one unifying client for local, remote, mobile, or centralized monitoring, which simplifies the installation process and allows minimal training for security managers. The intuitive interface enables onsite security personnel to be easily notified, allocate, and identify the situation. In addition, users can access the monitoring via internet, iPhone, iPad and Android platforms.

Advanced Control Center

The Surveon Control Center (SCC) is a powerful suite for mission-critical projects with multiple clients, hundreds of cameras, and large storage. With Surveon's video wall, hundreds of true HD cameras can be displayed, managed and controlled by one single SCC client. The SCC Alarm Center monitors every event, camera, and hardware status to offers a real-time, overall coverage. The domain-based architecture enables the SCC to centralize the management of every connected device (camera, NVR, or storage system), every user's authority, and every targeted monitoring range from one single login.

Key Features and Core Technology

Actionable Monitoring



Live View



Live View



eMap

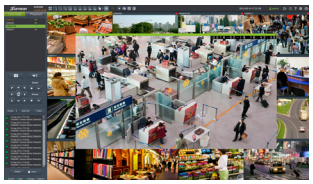

Video Alarm

Smart Investigation



Time Search



Fisheye Search

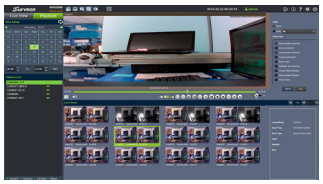

Event Search

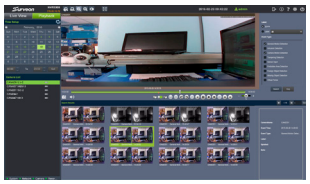

VI Search

Video Intelligence



Missing Object Detection

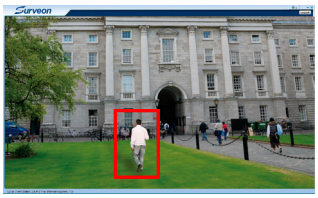

Intrusion Detection



Virtual Fence Detection

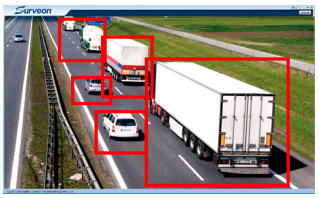

Object Counting Detection

Intellectual Surveillance System

Surveon video analytic technology embodies the real-time VI event monitoring. The advanced real-time detections include Foreign Object, Forbidden Area, Intrusion, Missing Object, Virtual Fence, Going-out, Tailgating , and the counting for Object and People. All VI events can be integrated and directed to relative actions, such as Time Search, Playback, Event Label, Video Popup, PTZ, Alarm Notifications and so on.

Actionable Monitoring and Smart Investigation

Surveon VMS provides an awareness-oriented management framework. Its real-time event notification on the security panel and the real-time live view, review and the advanced video labeling for event follow-up can turn the traditional passive monitoring to the active actions. Surveon smart investigation provides security managers an efficient tool to quickly identify useful information and relative footage from hundreds of hours of video recording.

Optimized for Megapixel Recording

Surveon NVR series is designed and manufactured in-house to handle the challenges of megapixel recording: large I/O capacity and reliable streaming performance. Built-in with the enterprise RAID subsystem, the enterprise grade NVR2100 gives the highest performance in the market with 64 channel Full HD cameras, 6Mbps and a total of 1920 FPS. Surveon NVR is expandable from 8, 12, 16 to 112 hard drives with the advanced hardware RAID engine on 0, 1, 5 and 6. Its high level data security functions feature thin provisioning, snapshot, volume copy/volume mirror, sync and remote replication.

SMR2100-4/2100-9

Professional Series



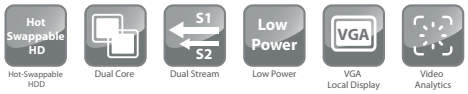

Features

- Support 4/9/16 CH 1080P Recording
- Support 2-Bay Hot-Swappable SATA Hard Disk
- Support RAID 1 for Data Protection
- Built-in Real-time Video Intelligence Detection
- Built-in Local Display
- Support Surveon Control Center (CMS)
- In-house Design & Production
- 3-Year Warranty

Mechanical Drawing

Unit:mm(inches)

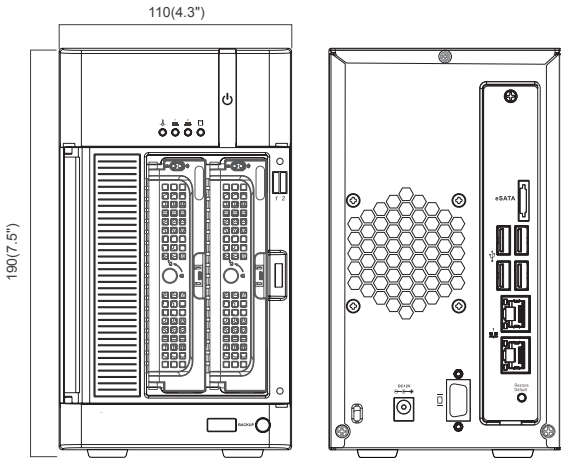

Technical Specifications

Model		SMR2100-4	SMR2100-9
General Feature	Hardware Type	Tower	
	Architecture	All-in-one	
	Max. Recording Channel	4	9
	Recording Throughput	96Mbps	
	Hard Disk Type	SATA (hot-swappable)	
	Max. Hard Disk	2	
	RAID Type	Built-in RAID	
	RAID Level	1	
	Storage Integration	N/A	
	Local Surveillance	Yes	
	Local Live View Channel	9	9
	Remote Live View Channel	9	9
	Video Management Solution	Surveon Enterprise Video Management Software (Client/ Server Architecture, Live View, PTZ, eMap, Real-time Video Analytics, Alarm Event Handling, Video Bookmark, Web Client, Remote Client, Centralized Domain Management)	
	Warranty	3 Years	
Hardware	System Processor	Intel® Dual Core	
	System Memory	DDR3 2GB x1 (up to 4GB x1)	
	Operating System	Linux Embedded System	
	Storage	3.5" SATA HDDs x2; HDD hot swappable with LED status indicator	
	I/O Interface	• VGA: 1x D-Sub • RJ-45: 2x Gigabit Ethernet • USB: 4x USB2.0 • E-SATA: x1	
	H/W RAID	Non-RAID, RAID 1	
	Electrical	• Input Voltage: 12VDC, 5A • Power Consumption (in operation): 43W	
	Operating Environment	• Humidity: 5% to 80% (non-condensing) • Temperature: 5° to 40°C	
	LED Indicator	Yes	
	Dimensions	190(H) x 110(W) x 245(D) mm	
	Weight	3 Kg (w/o Hard Disk)	
	Certification	CB, FCC / CE Class A, UL60959/ IEC 60950, CCC for power only	
Recording	Compression	H.264/MJEPG/MPEG4	
	Resolution	1M (1280 x 800) / 2M (1920 x 1080) / 3M (2048 x 1536)	
	Recording Rate	480fps@1M / 240fps@2M / 160fps@3M	
	Recording Policy	• Continuous and manual recording • Scheduled recording on daily or weekday basis	
Video Detection & Alarm	Rule Manager	• Conditional recording/alert/notification • Email, FTP, SMS, phone notifications • Sound, alarm, round-the-clock alerts	
	Video Intelligence	Detection of foreign and missing object, intrusion, forbidden area, tampering, virtual fence, object counting, tailgating, go out	
Playback & Backup	Investigation	• Search by date, time, camera • Search by VI event combinations	
	Playback Function	• Frame by frame / Key frame modes playback • Intuitive, video thumbnail search results • Cue-in, cue-out and repeat • Quick playback by video thumbnail	

SMR2110-16/2110-24/2110-32

Professional Series



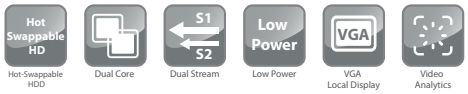

Features

- Support 4-32 CH 1080P Recording
- Support 2-Bay Hot-Swappable SATA Hard Disk
- Support RAID 1 for Data Protection
- Built-in Real-time Video Intelligence Detection
- Built-in Local Display
- Support Surveon Control Center (CMS)
- Compact Size & Low Power Consumption
- In-house Design & Production
- 3-Year Warranty

Mechanical Drawing

Unit:mm(inches)

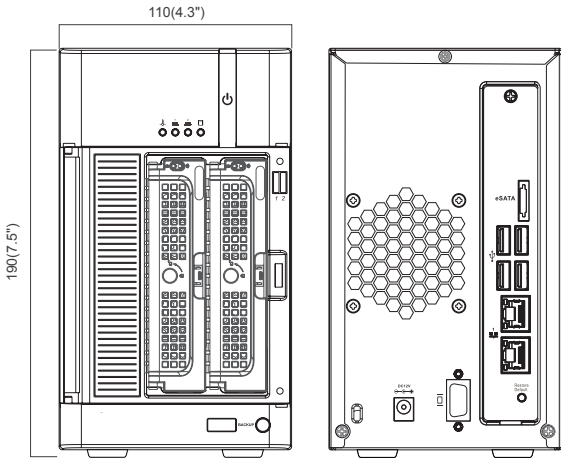

Technical Specifications

Model		SMR2110-16	SMR2110-24	SMR2110-32
General Feature	Hardware Type	Tower		
	Architecture	All-in-One		
	Max. Recording Channel	16	24	32
	Recording Throughput	192Mbps		
	Hard Disk Type	SATA (hot-swappable)		
	Max. Hard Disk	2		
	RAID Type	Built-in RAID		
	RAID Level	1		
	Storage Integration	NAS, iSCSI		
	Local Surveillance	Yes		
	Local Live View Channel	16	16	16
	Remote Live View Channel	32		
	Video Management Solution	Surveon Enterprise Video Management Software (Client/ Server Architecture, Live View, PTZ, eMap, Real-time Video Analytics, Alarm Event Handling, Video Bookmark, Web Client, Remote Client, Centralized Domain Management)		
	Warranty	3 Years		
Hardware	System Processor	Intel®Celeron Dual Core 2.0 GHz		
	System Memory	DDR3L 4GB x1		
	Operating System	Linux Embedded System		
	Storage	• 3.5" SATA HDDs x2; • HDD hot swappable with LED status indicator		
	I/O Interface	• VGA: DVI-I x1 • RJ-45: Gigabit Ethernet x1 • USB: USB 3.0 x1, USB 2.0 x3 • Serial: x1 (support RS232/422/485) • Audio: x1 • DC-input: x1 (12V DC-in JACK)		
	H/W RAID	Non-RAID, RAID 1		
	Electrical	• Input Voltage: 12V / 4A • Power Consumption (in operation): 48W		
	Operating Environment	• Humidity: 5% to 80% (non-condensing) • Temperature: 5° to 40°C		
	LED Indicator	Yes		
	Dimensions	190(H) x 110(W) x 245(D) mm		
	Weight	3 Kg (w/o Hard Disk)		
	Certification	CE, FCC		
Recording	Compression	H.264/MJEPG/MPEG4		
	Resolution	1M (1280 x 800) / 2M (1920 x 1080) / 3M (2048 x 1536) / 5M (2560 x 1920)		
	Recording Rate	960fps@1M / 480fps@2M / 320fps@3M		
	Recording Policy	• Continuous and manual recording • Scheduled recording on daily or weekday basis		
Video Detection & Alarm	Rule Manager	• Conditional recording/alert/notification • Email, FTP, SMS, phone notifications • Sound, alarm, round-the-clock alerts		
	Video Intelligence	Detection of foreign and missing object, intrusion, forbidden area, tampering, virtual fence, object counting, tailgating, go out		
Playback & Backup	Investigation	• Search by date, time, camera • Search by VI event combinations		
	Playback Function	• Frame by frame / Key frame modes playback • Intuitive, video thumbnail search results • Cue-in, cue-out and repeat • Quick playback by video thumbnail		

SMR5110-16/5110-24/5110-32

Professional Series



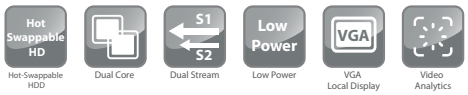

Features

- Support 16-32 CH 1080P Recording
- Support 5-Bay Hot-Swappable SATA Hard Disk
- Support RAID 1, 5, 6 for Data Protection
- Built-in Real-time Video Intelligence Detection
- Built-in Local Display
- Support Surveon Control Center (CMS)
- Compact Size & Low Power Consumption
- In-house Design & Production
- 3-Year Warranty

Mechanical Drawing

Unit:mm(inches)

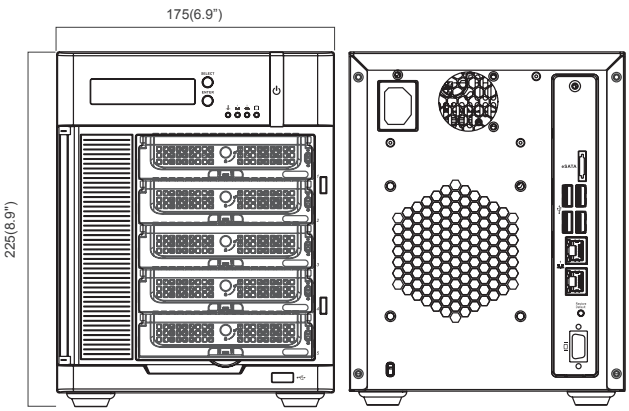

Technical Specifications

Model		SMR5110-16	SMR5110-24	SMR5110-32
General Feature	Hardware Type	Tower		
	Architecture	All-in-One		
	Max. Recording Channel	16	24	32
	Recording Throughput	192Mbps		
	Hard Disk Type	SATA (Hot-swappable)		
	Max. Hard Disk	5		
	RAID Type	Built-in RAID		
	RAID Level	1, 5, 6		
	Storage Integration	NAS, iSCSI		
	Local Surveillance	Yes		
	Local Live View Channel	16	16	16
	Remote Live View Channel	32		
	Video Management Solution	Surveon Enterprise Video Management Software (Client/ Server Architecture, Live View, PTZ, eMap, Real-time Video Analytics, Alarm Event Handling, Video Bookmark, Web Client, Remote Client, Centralized Domain Management)		
	Warranty	3 Years		
Hardware	System Processor	Intel®Celeron Dual Core 2.0 GHz		
	System Memory	DDR3L 4GB x1		
	Operating System	Linux Embedded System		
	Storage	• 3.5" SATA HDDs x2 • HDD hot swappable with LED status indicator		
	I/O Interface	• VGA: DVI-I x1 • RJ-45: Gigabit Ethernet x1 • USB: USB 3.0 x1, USB 2.0 x3 • Serial: x1 (support RS232/422/485) • Audio: x1 • DC-input: x1 (12V DC-in JACK)		
	H/W RAID	Non-RAID, RAID 1, 5, 6		
	Electrical	• Input Voltage: 12V / 7.5A • Power Consumption (in operation): 90W		
	Operating Environment	• Humidity: 5% to 80% (non-condensing) • Temperature: 5° to 40°C		
	LED Indicator	Yes		
	Dimensions	225(H) x 175(W) x 245(D) mm		
	Weight	5 Kg (w/o Hard Disk)		
	Certification	CE, FCC		
Recording	Compression	H.264/MJEPG/MPEG4		
	Resolution	1M (1280 x 800) / 2M (1920 x 1080) / 3M (2048 x 1536) / 5M (2560 x 1920)		
	Recording Rate	960fps@1M / 480fps@2M / 320fps@3M		
	Recording Policy	• Continuous and manual recording • Scheduled recording on daily or weekday basis		
Video Detection & Alarm	Rule Manager	• Conditional recording/alert/notification • Email, FTP, SMS, phone notifications • Sound, alarm, round-the-clock alerts		
	Video Intelligence	Detection of foreign and missing object, intrusion, forbidden area, tampering, virtual fence, object counting, tailgating, go out		
Playback & Backup	Investigation	• Search by date, time, camera • Search by VI event combinations		
	Playback Function	• Frame by frame / Key frame modes playback • Intuitive, video thumbnail search results • Cue-in, cue-out and repeat • Quick playback by video thumbnail		

NVR3104-4/3104-9/3104-16

Professional Series

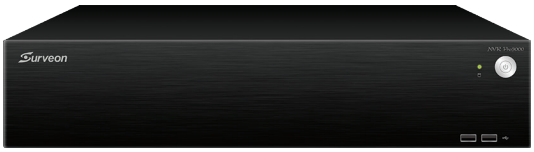

Features

- Support 4/9/16 CH 1080P Recording
- Support 4-bay SATA Hard Disk
- Support RAID 1, 5, 6 for Data Protection
- Built-in Real-Time Video Intelligence Detection
- Built-in Dual Display
- Support Surveon Control Center (SCC)
- In-House Design & Production
- 2-Year Warranty

Mechanical Drawing

Unit:mm(inches)

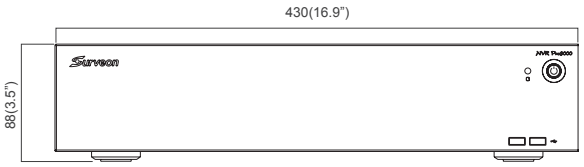

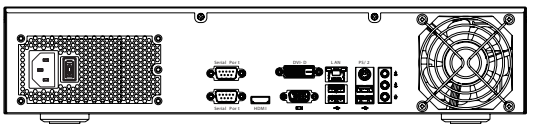

Technical Specifications

Model		NVR3104-4	NVR3104-9	NVR3104-16
General Feature	Hardware Type	Desktop		
	Architecture	All-in-One		
	Max. Recording Channel	4	9	16
	Recording Throughput	96Mbps		
	Hard Disk Type	SATA		
	Max. Hard Disk	4		
	RAID Type	Built-in RAID		
	RAID Level	1, 5, 6		
	Storage Integration	NAS, iSCSI		
	Local Surveillance	Yes		
	Local Live View Channel	16	16	16
	Remote Live View Channel	16		
	Video Management Solution	Surveon Enterprise Video Management Software (Client/ Server Architecture, Live View, PTZ, eMap, Real-time Video Analytics, Alarm Event Handling, Video Bookmark, Web Client, Remote Client, Centralized Domain Management)		
	Warranty	2 Years		
Hardware	System Processor	Intel® Celeron Dual Core 1.8GHz		
	System Memory	DDR3 2GB (up to 4GB)		
	Operating System	Linux Embedded System		
	Storage	4 x 3.5" SATAII/SATAIII hard disk drives		
	I/O Interface	• RJ-45: 1x Gigabit Ethernet • USB: 6x USB2.0 • VGA(DVI): x1, HDMI: x1, DVI-D: x1		
	H/W RAID	Non-RAID, 1, 5, 6		
	Electrical	• Input voltage: 100-240V • Power Supply: 250W		
	Operating Environment	• Humidity: 5% to 80% (non-condensing) • Temperature: 5º to 40ºC		
	LED Indicator	Yes (Power, HDD)		
	Dimensions	88(H) x 430(W) x 390(D) mm		
	Weight	≤9kg (without HDD)		
	Certification	UL, CB, FCC/CE Class A		
Recording	Compression	H.264/MJEPG/MPEG4		
	Resolution	1M (1280 x 800) / 2M (1920 x 1080) / 3M (2048 x 1536) / 5M (2560 x 1920)		
	Recording Rate	480fps@1M / 240fps@2M / 160fps@3M		
	Recording Policy	• Continuous and manual recording • Scheduled recording on daily or weekday basis		
Video Detection & Alarm	Rule Manager	• Conditional recording/alert/notification • Email, FTP, SMS, phone notifications • Sound, alarm, round-the-clock alerts		
	Video Intelligence	Detection of foreign and missing object, intrusion, forbidden area, tampering, virtual fence, object counting, tailgating, go out		
Playback & Backup	Investigation	• Search by date, time, camera • Search by VI event combinations		
	Playback Function	• Frame by frame / Key frame modes playback • Intuitive, video thumbnail search results • Cue-in, cue-out and repeat • Quick playback by video thumbnail		

NVR3308-16/3308-24/3308-32/3308-48/3308-64

Professional Series

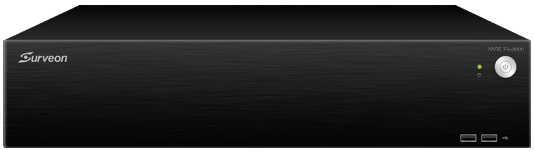

Features

- Support 16-64 CH 1080P Recording
- Support 8-bay SATA Hard Disk
- Support RAID 1, 5, 6 for Data Protection
- Built-in Real-Time Video Intelligence Detection
- Built-in Dual Display
- Support Surveon Control Center (SCC)
- In-House Design & Production
- 2-Year Warranty

Mechanical Drawing

Unit:mm(inches)

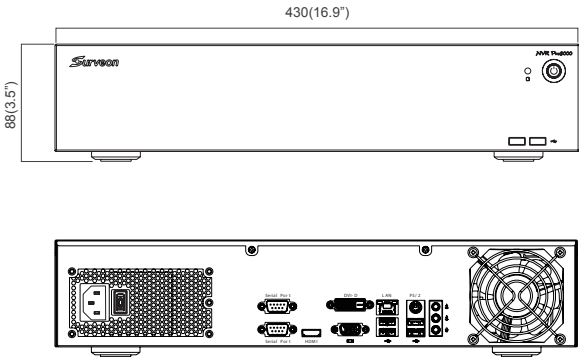

Technical Specifications

Model		NVR3308-16	NVR3308-24	NVR3308-32	NVR3308-48	NVR3308-64
General Feature	Hardware Type	Desktop				
	Architecture	All-in-One				
	Max. Recording Channel	16	24	32	48	64
	Recording Throughput	192Mbps			384Mbps	
	Hard Disk Type	SATA				
	Max. Hard Disk	8				
	RAID Type	Built-in RAID				
	RAID Level	1, 5, 6				
	Storage Integration	NAS, iSCSI				
	Local Surveillance	Yes				
	Local Live View Channel	32	32	32	32	32
	Remote Live View Channel	32			64	
	Video Management Solution	Surveon Enterprise Video Management Software (Client/ Server Architecture, Live View, PTZ, eMap, Real-time Video Analytics, Alarm Event Handling, Video Bookmark, Web Client, Remote Client, Centralized Domain Management)				
	Warranty	2 Years				
Hardware	System Processor	NVR3308E1: Intel® Core i3 Dual Core 3.3GHz NVR3308A1: Intel® Core i7 Quad Core 3.4GHz				
	System Memory	DDR3 4GB (up to 16GB)				
	Operating System	Linux Embedded System				
	Storage	8 x 3.5" SATAII/SATAIII hard disk drives				
	I/O Interface	• RJ-45: 2x Gigabit Ethernet • USB: 8x USB2.0 • VGA: x1, HDMI: x1				
	H/W RAID	Non RAID, 1, 5, 6				
	Electrical	• Input voltage: 100-240V, 3.5A • Power Supply: 250W				
	Operating Environment	• Humidity: 5% to 80% (non-condensing) • Temperature: 5º to 40ºC				
	LED Indicator	Yes (Power, HDD)				
	Dimensions	88(H) x 430(W) x 390(D) mm				
	Weight	≤9kg (without HDD)				
	Certification	UL, CB, FCC/CE Class A				
	DOM	4GB				
Recording	Compression	H.264/MJEPG/MPEG4				
	Resolution	1M (1280 x 800) / 2M (1920 x 1080) / 3M (2048 x 1536) / 5M (2560 x 1920)				
	Recording Rate	960fps@1M / 480fps@2M / 320fps@3M			1920fps@1M / 960fps@2M / 640fps@3M	
	Recording Policy	• Continuous and manual recording • Scheduled recording on daily or weekday basis				
Video Detection & Alarm	Rule Manager	• Conditional recording/alert/notification • Email, FTP, SMS, phone notifications • Sound, alarm, round-the-clock alerts				
	Video Intelligence	Detection of foreign and missing object, intrusion, forbidden area, tampering, virtual fence, object counting, tailgating, go out				
Playback & Backup	Investigation	• Search by date, time, camera • Search by VI event combinations				
	Playback Function	• Frame by frame / Key frame modes playback • Intuitive, video thumbnail search results • Cue-in, cue-out and repeat • Quick playback by video thumbnail				

SMR8300-16/8300-24/8300-32/8300-48/8300-64

Enterprise Series





Features

- Support 16/24/32/48/64 CH 1080P Recording
- Support 8-bay Hot-swappable SATA Hard Disk
- Support RAID 1, 5, 6 for Data Protection
- Built-in Real-Time Video Intelligence Detection
- Built-in Dual Display
- Support Surveon Control Center (CMS)
- In-House Design & Production
- 3-Year Warranty

Mechanical Drawing

Unit:mm(inches)

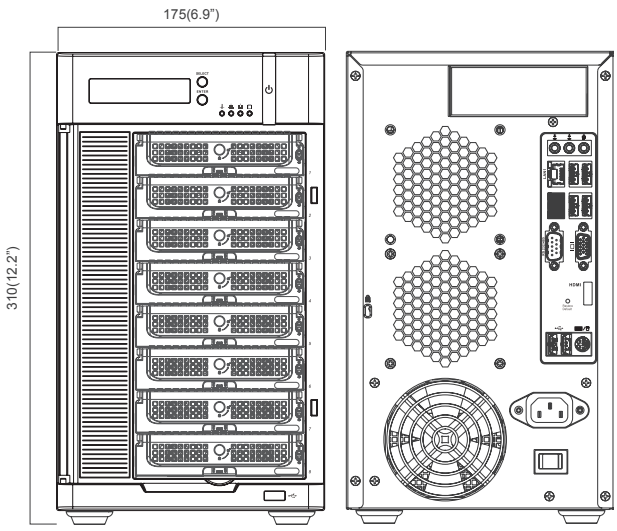

Technical Specifications

Model		SMR8300-16	SMR8300-24	SMR8300-32	SMR8300-48	SMR8300-64
General Feature	Hardware Type	Tower				
	Architecture	All-in-One				
	Max. Recording Channel	16	24	32	48	64
	Recording Throughput	192Mbps			384Mbps	
	Hard Disk Type	SATA (hot-swappable)				
	Max. Hard Disk	8				
	RAID Type	Built-in RAID				
	RAID Level	1, 5, 6				
	Storage Integration	NAS, iSCSI				
	Local Surveillance	Yes				
	Local Live View Channel	32	32	32	32	32
	Remote Live View Channel	32			64	
	Video Management Solution	Surveon Enterprise Video Management Software (Client/ Server Architecture, Live View, PTZ, eMap, Real-time Video Analytics, Alarm Event Handling, Video Bookmark, Web Client, Remote Client, Centralized Domain Management)				
	Warranty	3 Years				
Hardware	System Processor	SMR8300E: Intel® Core i3 Dual Core 3.3GHz SMR8300A: Intel® Core i7 Quad Core 3.4GHz				
	System Memory	DDR3 4GB (up to 16GB)				
	Operating System	Linux Embedded System				
	Storage	3.5" SATA HDDs x8; HDD hot swappable with LED status indicator				
	I/O Interface	• VGAx1; HDMIx1 • RJ-45: 2x Gigabit Ethernet • USB: 6x USB2.0 • COM: x1				
	H/W RAID	Non RAID, 1, 5, 6				
	Electrical	• Input voltage: 100V~240V, 3.5A • Power Supply: 430W				
	Operating Environment	• Humidity: 5% to 80% (non-condensing) • Temperature: 5° to 40°C				
	LCD Panel	Yes				
	LED Indicator	Yes (Fan, Temperature, Power, HDD)				
	Dimensions	310(H) x 175(W) x 380(D) mm				
	Weight	8.9 Kg (w/o Hard Disk)				
	Certification	CB, FCC / CE Class B, UL60959/ IEC 60950				
Recording	Compression	H.264/MJEPG/MPEG4				
	Resolution	1M (1280 x 800) / 2M (1920 x 1080) / 3M (2048 x 1536) / 5M (2560 x 1920)				
	Recording Rate	960fps@1M / 480fps@2M / 320fps@3M			1920fps@1M / 960fps@2M / 640fps@3M	
	Recording Policy	• Continuous and manual recording • Scheduled recording on daily or weekday basis				
Video Detection & Alarm	Rule Manager	• Conditional recording/alert/notification • Email, FTP, SMS, phone notifications • Sound, alarm, round-the-clock alerts				
	Video Intelligence	Detection of foreign and missing object, intrusion, forbidden area, tampering, virtual fence, object counting, tailgating, go out				
Playback & Backup	Investigation	• Search by date, time, camera • Search by VI event combinations				
	Playback Function	• Frame by frame / Key frame modes playback • Intuitive, video thumbnail search results • Cue-in, cue-out and repeat • Quick playback by video thumbnail				

NVR5316-16/5316-24/5316-32/5316-48/5316-64

Enterprise Series



Megapixel Recording | HW RAID 5, 6 | XEON Platform | Storage Management | Advanced VI | Infortrend EonStor DS

Features

- Support 16/24/32/48/64 CH 1080P Recording
- Scalable Client-Server Architecture
- Support 16-bay SATA Hard Disk
- Built-in RAID Function for Data Protection
- Built-in Real-time Video Intelligence Detection
- Support Surveon Control Center
- Two Redundant Power Supplies

Mechanical Drawing

Unit:mm(inches)

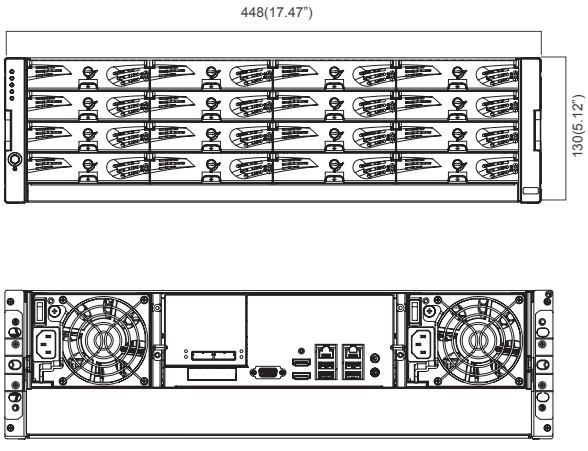

Technical Specifications

Model		NVR5316-16	NVR5316-24	NVR5316-32	NVR5316-48	NVR5316-64
General Feature	Hardware Type	Rack Mount				
	Architecture	All-in-One & Client-Server Architecture				
	Max. Recording Channel	16	24	32	48	64
	Recording Throughput	192Mbps			384Mbps	
	Hard Disk Type	SATA (hot-swappable)				
	Max. Hard Disk	16				
	RAID Type	Built-in RAID				
	RAID Level	1, 5, 6				
	Storage Integration	NAS, iSCSI, SAS JBOD				
	Local Surveillance	Yes				
	Local Live View Channel	16	16	16	16	16
	Remote Live View Channel	32			64	
	Video Management Solution	Surveon Enterprise Video Management Software (Client/Server Architecture, Live View, PTZ, eMap, Real-time Video Analytics, Alarm Event Handling, Video Bookmark, Web Client, Remote Client, Centralized Domain Management)				
	Warranty	3 Years				
Hardware (NVR2100 Head)	System	NVR5316E1: Intel® Core i3 Dual Core 3.5GHz NVR5316A1: Intel® Xeon E3 Quad Core 3.2GHz				
	Server Processor	DDR3 4GB (up to 32GB)				
	System Memory	4GB, DDRIII-1333				
	Operating System	Linux Embedded System				
	Storage	16 x 3.5" SATAII/SATAIII hard disk drives				
	I/O Interface	• RJ-45: 2x Gigabit Ethernet • USB: 2x USB2.0 ; 2x USB3.0 • VGA: x1, HDMI: x2 • 16 pin for 8 in / 2 out *				
	RAID	Non-RAID, 1, 5, 6				
	Electrical	• Input voltage: 100VAC~240VAC, 50~60Hz, 10~5A(max) • Power Supply: Two redundant 530W				
	Operating Environment	• Humidity: 5% to 80% (non-condensing) • Temperature: 5º to 35ºC				
	LED Indicator	Yes (Power, HDD, FAN, system fault)				
	Dimensions	130(H) x448 (W) x 500(D) mm				
	Weight	21.54kg/ 47.49lbs (without HDDs)				
	Certification	UL, CB, FCC/CE Class A				
Recording	Compression	H.264/MJEPG/MPEG4				
	Resolution	1M (1280 x 800) / 2M (1920 x 1080) / 3M (2048 x 1536) / 5M (2560 x 1920)				
	Recording Rate	960fps@1M / 480fps@2M / 320fps@3M			1920fps@1M / 960fps@2M / 640fps@3M	
	Recording Policy	• Continuous and manual recording • Scheduled recording on daily or weekday basis				
Video Detection & Alarm	Rule Manager	• Conditional recording/alert/notification • Email, FTP, SMS, phone notifications • Sound, alarm, round-the-clock alerts				
	Video Intelligence	Detection of foreign and missing object, intrusion, forbidden area, tampering, virtual fence, object counting, tailgating, go out				
Playback Function	Investigation	• Search by date, time, camera • Search by VI event combinations				
	Playback Function	• Frame by frame / Key frame modes playback • Intuitive, video thumbnail search results • Cue-in, cue-out and repeat • Quick playback by video thumbnail				

NVR2104-16/2104-25/2104-32/2104-48/2104-64

Corporate Series



Megapixel Recording | HW RAID 5, 6 | XEON Platform | Storage Management | Advanced VI

Infortrend EonStor DS

Features

- Maximum 64CH 1080P Recording
- Enterprise-Grade RAID Subsystem
- Expandable to Maximum 448TB
- DAS and iSCSI SAN Supported
- Scalable Client-Server Architecture
- Up to 64 CH Real-time VI Detection

Mechanical Drawing

Unit:mm(inches)

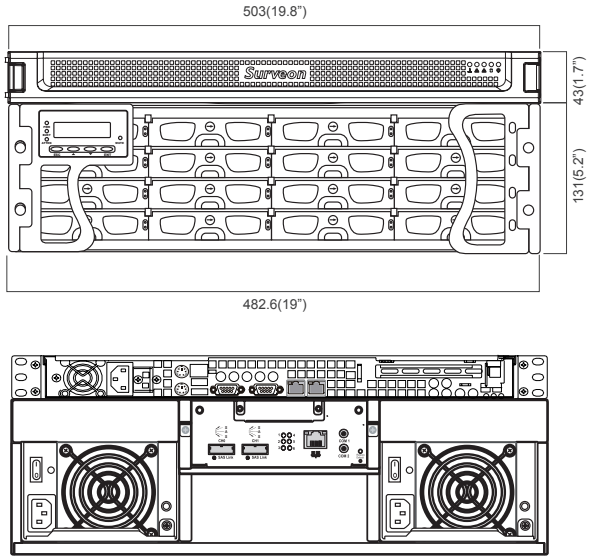

Technical Specifications

Model		NVR2104-16	NVR2104-25	NVR2104-32	NVR2104-48	NVR2104-64
General Feature	Hardware Type	Rack Mount				
	Architecture	Client Server				
	Max. Recording Channel	16	25	32	48	64
	Recording Throughput	1000Mbps+				
	Hard Disk Type	SATA, SAS				
	Max. Hard Disk	112				
	RAID Type	EonStor RAID Controller				
	RAID Level	0, 1, 5, 6, 10, 30, 50, 60				
	Storage Integration	Integration & Installation Free (Automatic Management by Surveon VMS Suite)				
	Local Surveillance	N/A				
	Local Live View Channel	N/A				
	Remote Live View Channel	72				
	Video Management Solution	Surveon Enterprise Video Management Software (Client/ Server Architecture, Live View, PTZ, eMap, Real-time Video Analytics, Alarm Event Handling, Video Bookmark, Web Client, Remote Client, Centralized Domain Management)				
	Warranty	3 Years				
Hardware (NVR2100 Head)	System	Client-server architecture, Chassis: 1U 19" Rack				
	Server Processor	Intel Core i3 @ 3.3 GHz or Intel XEON @ 3.2 GHz				
	System Memory	4GB, DDRIII-1333				
	Operating System	2.5" HDD with Windows 7 Embedded System				
	I/O Interface	• PS2 Mouse port x1 • PS2 Keyboard port x1 • USB port x2 • Serial Port x1 • VGA Port x1 • RJ-45: 2x Gigabit Ethernet • SAS Expansion port (Option)				
	Electrical	• Input voltage : 100-240 V, 50-60 Hz, 4.2-1.8 Amp • Power: Single 350 watt AC power				
	Power Consumption	Rated output power: 350 W				
	Weight	Gross weight: 16.5 kg (38 lb.)				
	Dimensions	50.3(W)x 43.7(D)x 4.3(H) cm (19.85 " x 17.2 " x 1.7 ")				
	Environmental	Temperature: • Operating: 10° C to 35° C (50° F to 95° F) • Non-operating: -40° C to 70° C (-40° F to 158° F) Humidity: • Operating: 8% to 90%, non-condensing • Non-operating: 5% to 95% non-condensing				
	Certification	CB, FCC / CE Class A, UL60959/ IEC 60950, CCC				
Hardware (RAID Subsystem)	Host Connectivity	1 or 2 SAS 4x wide ports per controller				
	Drive Connectivity	SAS/SATA-II disk, 12 or 16 drives per system, hot swappable				
	Form Factor	2~3U, 19 inch rackmount				
	RAID Functionality	RAID 0, 1 (0+1), 3, 5, 6, 10, 30, 50, 60, hot-spare, online expansion, RAID migration, intelligent drive handling				
	Environmental	Operating temperature: 5° to 40°C (35°C if battery is applied) Non-operating temperature: - 40° to 60°C Humidity: 5 to 95%, non-condensing				
	Dimensions	12 Bay: chassis without handles: 446(W) x 88(H) x 490(D) mm; chassis with handles: 482 (W) x 88(H) x 505(D) mm 16 Bay: chassis without handles: 445(W) x 130(H) x 488.2(D) mm; chassis with handles: 482.6(W) x 131(H) x 504.3(D) mm				
	Weight	Gross weight : 12 Bay: 25kg ; 16 Bay: 30.5kg				
	Certification	CE, FCC Class B, BSMI, UL, GOST-R				

NVR7316-64/7316-96/7316-128

Corporate Series





Features

- Maximum 128CH 1080P Recording
- Support 16-bay Hot-Swappable SATA Hard Disk
- SAS JBOD and iSCSI Storage Expansion
- Enterprise Hardware RAID Function for Data Protection
- Cableless Design & Two Redundant Power Supplies
- Built-in Enterprise VMS & Real-Time Video Intelligence
- Support Web-based System Maintenance Tool (SurveOne)
- Scalable Client-Server Architecture

Mechanical Drawing

Unit:mm(inches)

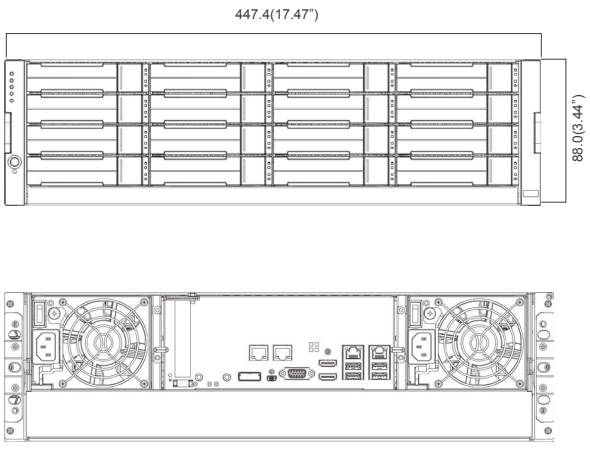

Technical Specifications

Model		NVR7316-64	NVR7316-96	NVR7316-128
General Feature	Hardware Type	Rack Mount		
	Architecture	Client-Server Architecture		
	Max. Recording Channel	64	96	128
	Recording Throughput	768Mbps		
	Hard Disk Type	SATA		
	Max. Hard Disk	16		
	RAID Type	Built-in Hardware RAID		
	RAID Level	Non RAID, 1, 5, 6		
	Storage Integration	SAS JBOD and iSCSI Storage		
	Local Surveillance	Yes		
	Local Live View Channel	64		
	Remote Live View Channel	128		
	Video Management Solution	Surveon Enterprise Video Management Software (Client/ Server Architecture, Live View, PTZ, eMap, Real-time Video Analytics, Alarm Event Handling, Video Bookmark, Web Client, Remote Client, Centralized Domain Management)		
	Warranty	3 Years		
Hardware	System Processor	Intel® Xeon E3 Quad Core 3.2GHz		
	System Memory	DDR3 16GB (up to 32GB)		
	Chipset	Intel® Q87 Express Chipset-Embedded		
	Operating System	2.5" HDD with Linux Embedded System		
	Storage	16 x 3.5" SATAII/SATAIII hard disk drives		
	I/O Interface	RJ-45 Gigabit Ethernet x2 (default), up to 4 x GbE port (optional) USB 2.0 x 2 (rear) USB 3.0 x2 (rear) VGA x 1 HDMI x 2 Mic. In port x1 Speaker out port x 1		
	RAID	Non RAID, 1, 5, 6		
	Electrical	Dual Redundant PSU (460W)		
	Operating Environment	• Humidity: 5% to 80% (non-condensing) • Temperature: 5º to 40ºC		
	LCD Panel	N/A		
	LED Indicator	Yes		
	Dimensions	3U 19" Rackmount, 130.0(H) x 447.4(W) x 524.4(D) mm		
	Weight	21.54kg/ 47.49lbs (without HDDs)		
	Certification	UL, CB, FCC/CE Class A		
Recording	Compression	H.264/MJEPG/MPEG4		
	Resolution	1M (1280 x 800) / 2M (1920 x 1080) / 3M (2048 x 1536) / 5M (2560 x 1920)		
	Recording Rate	3840fps@1M / 1920fps@2M / 1280fps@3M		
	Recording Policy	• Continuous and manual recording • Scheduled recording on daily or weekday basis		
Video Detection & Alarm	Rule Manager	• Conditional recording/alert/notification • Email, FTP, SMS, phone notifications • Sound, alarm, round-the-clock alerts		
	Video Intelligence	Detection of foreign and missing object, intrusion, forbidden area, tampering, virtual fence, object counting, tailgating, go out		
Playback Function	Investigation	• Search by date, time, camera • Search by VI event combinations		
	Playback Function	• Frame by frame / Key frame modes playback • Intuitive, video thumbnail search results • Cue-in, cue-out and repeat • Quick playback by video thumbnail		

NVR7812/7816

Corporate Series





Features

- Pre-load Milestone VMS
- Support Up to 150 CH 3MP Cameras without Frame Drop
- Total Recording Throughput - 3984Mbps
- Built-in SAS Expansion for JBODs with Up to 316 HDDs
- NVR + Storage Design with Built-in H/W RAID Function to Provide Stable System Integration
- Cableless Design with Hot Swappable Redundant Power

Mechanical Drawing

Unit:mm(inches)

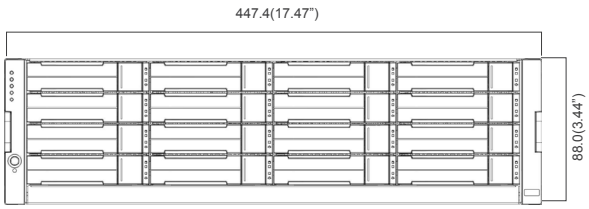

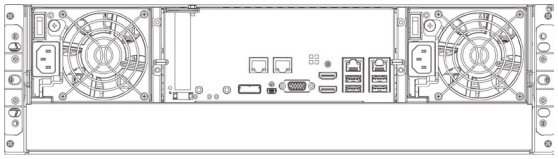

Technical Specifications

Model		NVR7812	NVR7816
General Feature	Hardware Type	Rack Mount	
	Architecture	Client-Server Architecture	
	Max. Recording Channel	150	150
	Recording Throughput	Up to 3984Mbps	
	Hard Disk Type	SATA, NL-SAS	
	Max. Hard Disk	16	
	RAID Type	Built-in Hardware RAID	
	RAID Level	RAID 0, 1, 5, 6, 10, 50, 60	
	Storage Integration	SAS JBOD and iSCSI Storage	
	Local Surveillance	Yes	
	Local Live View Channel	N/A	
	Remote Live View Channel	Unlimited	
	Video Management Solution	Milestone XProtect VMS (Xprotect Enterprise, XProtect Corporate)	
	Warranty	3 Years	
Hardware	System Processor	Intel® Core i3 dual-coreor or Intel® Xeon E3 quad-core	
	System Memory	DDR3 8GB (up to 32GB)	
	Chipset	Intel® Q87 Express Chipset-Embedded	
	Operating System	2.5" HDD with Windows 7 System	
	Storage	16 x 3.5" SATAII/SATAIII hard disk drives	
	I/O Interface	Gigabit Ethernet x 4 USB 2.0 x 2 (rear) USB 3.0 x2 (rear) VGA x 1 HDMI x 2 Mic. In port x1 Speaker out port x 1	
	RAID	RAID 0, 1, 5, 6, 10, 50, 60	
	Electrical	Dual Redundant PSU (460W)	
	Operating Environment	• Humidity: 5% to 80% (non-condensing) • Temperature: 5º to 40ºC	
	LCD Panel	N/A	
	LED Indicator	Yes	
	Dimensions	2U 19" Rackmount, 88.0(H) x 447.4(W) x 524.4(D) mm	3U 19" Rackmount, 130.0(H) x 447.4(W) x 524.4(D) mm
	Weight	13.60kg/ 29.98lbs (without HDDs)	21.54kg/ 47.49lbs (without HDDs)
	Certification	UL, CB, FCC/CE Class A	
Recording	Compression	H.264/MJEPG/MPEG4	
	Resolution	1M (1280 x 800) / 2M (1920 x 1080) / 3M (2048 x 1536) / 5M (2560 x 1920)	
	Recording Rate	4500fps@2M&3M	
	Recording Policy	• Continuous and manual recording • Scheduled recording on daily or weekday basis	
Video Detection & Alarm	Rule Manager	• Conditional recording/alert/notification • Email, FTP, SMS, phone notifications • Sound, alarm, round-the-clock alerts	
	Video Intelligence	Detection of foreign and missing object, intrusion, forbidden area, tampering, virtual fence, object counting, tailgating, go out	
Playback Function	Investigation	• Search by date, time, camera • Search by VI event combinations	
	Playback Function	• Frame by frame / Key frame modes playback • Intuitive, video thumbnail search results • Cue-in, cue-out and repeat • Quick playback by video thumbnail	

Surveon
Complete Megapixel Solutions

Video Storage

- Enterprise-Grade RAID Subsystem
- Optimized for Megapixel Recording
- Fault Tolerant & Redundant HW Design
- Maximum Reliability with RAID5, 6



ESDS 1012

2U 12-Bay EonStor DS Storage Series



Host 6G SAS | Drive 6G SAS | Cache Safe | Host 1G iSCSI

Infortrend EonStor

Features

- Four 6Gb/s SAS ports
- Eight 1Gb/s iSCSI ports
- 2U, 19-inch rackmount
- Up to 550K IOPS and 5,500 MBps throughput
- Dual controllers and redundant power supplies
- Up to 316 HDD support
- Multiple host interface options
- Up to 16X more read IOPS and 88% lower latency for the hottest data

Technical Specifications

Model	ESDS 1012
Host Ports	• Onboard Gb/s ports • Eight 1Gb/s iSCSI ports (4 per controller) • More host options: • Four 16Gb/s Fibre Channel ports (2 per controller) • Eight 8Gb/s Fibre Channel ports (4 per controller) • Four 10Gb/s iSCSi ports/ SFP+ or RJ-45 (2 per controller) • Eight 1Gb/s iSCSI ports (4 per controller) • Four 12Gb/s SAS ports (2 per controller) • Four 6Gb/s SAS ports (2 per controller)
Storage Controller	Dual redundant controllers
Cache Memory	Default 4GB (2x2GB), up to 8GB (4x2GB), 16GB (4x4GB) or 32GB (4x8GB) ** Default installed memory may vary by model, region, and other factors. Contact our sales representatives for details.
Drive Connectivity	• 6Gb/s SAS connectivity • S.M.A.R.T. support • Automatic bad-sector reassignment • Dedicated bandwidth to each connected drive
Maximum Number of Drives	• Per system: 12 • Via JBOD: 312
Rack Support	2U, 19-inch rackmount
RAID Functionality	• Global, delicated or enclosure hot-spare • RAID levels supported : RAID 0, 1 (0+1), 3, 5, 6, 10, 30, 50, 60 • Online expansion by: - Adding new drives - Copying and replacing drives with drives of larger capacity • RAID migration • Configurable stripe size and write policy per system • Intelligent drive handling - In degraded mode: skips irreparable blocks to continue rebuild - In normal operation: data-block verification and repair
Green Design	• 80 PLUS-certified power supplies delivering more than 80% energy efficiency • Intelligent multi-level drive spin-down
Availability and Reliability	• Redundant, hot-swappable hardware modules • CacheSafe technology** • Multi-pathing support (EonPath) • Device mapper support
Notification	Various event notification methods including email, LAN broadcast, fax, SNMP trap and SMS
Management	• Web-based SANWatch management software • RS232 serial port for local access to firmware-embedded utility • Automated cache flush and caching mode operation per enclosure status • Telnet and SSH system monitoring via Ethernet • Platform-independent firmware management GUI • Module status LED indicators: component presence detection & thermal sensors via I2C bus
Service and Support	• Standard service: 3-year limited hardware/software warranty and 8x5 phone, web, and email support • Upgrade/Extension service*: replacement part dispatch on the next business day (up to 5 years) • Advanced Service: 24x7 phone, web and email support + onsite diagnostics on the next business day • Premium Service: 24x7 phone, web and email support + onsite diagnostics in 4 hours * Optional ** Service may vary by region
Power	• Power supplies: Two 460W • AC voltage: 100VAC @ 8A to 240VAC @ 4A with PFC (auto-switching) • Frequency: 50-60 Hz
Environmental	• Temperature: - Operating: 0 to 40°C without BBU or CBM / 0 to 35°C with BBU or CBM - Non-operating: -40 to 60° • Altitude: Sea level to 3660m (12,000ft) operating / sea level to 12,192m (40,000ft) non-operating • Relative humidity: 5 to 95% non-condensing, operating and non-operating
Dimensions	Without chassis ears / protrusions: 448mm (W) x 88mm (H) x 500mm (D)
Weight	Without HDDs:13.60kg (29.98lbs)
Package Dimensions	770mm (W) x 350mm (H) x 580mm (D)

ESDS 1016

3U 16-Bay EonStor DS Storage Series



Host 6G SAS | Drive 6G SAS | Cache Safe | Host 1G iSCSI

Infortrend EonStor

Features

- Four 6Gb/s SAS ports
- Eight 1Gb/s iSCSI ports
- 3U, 19-inch rackmount
- Up to 550K IOPS and 5,500 MBps throughput
- Dual controllers and redundant power supplies
- Up to 316 HDD support
- Hybrid host interface with optional onboard iSCSI
- Multiple host interface options
- Up to 16X more read IOPS and 88% lower latency for the hottest data
- Multiple Monitoring Methods

Technical Specifications

Model	ESDS 1016
Host Ports	• Onboard Gb/s ports • Eight 1Gb/s iSCSI ports (4 per controller) • More host options: • Four 16Gb/s Fibre Channel ports (2 per controller) • Eight 8Gb/s Fibre Channel ports (4 per controller) • Four 10Gb/s iSCSi ports/ SFP+ or RJ-45 (2 per controller) • Eight 1Gb/s iSCSI ports (4 per controller) • Four 12Gb/s SAS ports (2 per controller) • Four 6Gb/s SAS ports (2 per controller)
Storage Controller	Dual redundant controllers
Cache Memory	Default 4GB (2x2GB), up to 8GB (4x2GB), 16GB (4x4GB) or 32GB (4x8GB) ** Default installed memory may vary by model, region, and other factors. Contact our sales representatives for details.
Drive Connectivity	• 6Gb/s SAS connectivity • S.M.A.R.T. support • Automatic bad-sector reassignment • Dedicated bandwidth to each connected drive
Maximum Number of Drives	• Per system: 16 • Via JBOD: 316
Rack Support	3U, 19-inch rackmount
RAID Functionality	• Global, delicated or enclosure hot-spare • RAID levels supported : RAID 0, 1 (0+1), 3, 5, 6, 10, 30, 50, 60 • Online expansion by: - Adding new drives - Copying and replacing drives with drives of larger capacity • RAID migration • Configurable stripe size and write policy per system • Intelligent drive handling - In degraded mode: skips irreparable blocks to continue rebuild - In normal operation: data-block verification and repair
Green Design	• 80 PLUS-certified power supplies delivering more than 80% energy efficiency • Intelligent multi-level drive spin-down
Availability and Reliability	• Redundant, hot-swappable hardware modules • CacheSafe technology • Multi-pathing support (EonPath) • Device mapper support
Notification	Various event notification methods including email, LAN broadcast, fax, SNMP trap and SMS
Management	• Web-based SANWatch management software • RS232 serial port for local access to firmware-embedded utility • Automated cache flush and caching mode operation per enclosure status • Telnet and SSH system monitoring via Ethernet • Platform-independent firmware management GUI • Module status LED indicators: component presence detection & thermal sensors via I2C bus
Service and Support	• Standard service: 3-year limited hardware/software warranty and 8x5 phone, web, and email support • Upgrade/Extension service*: replacement part dispatch on the next business day (up to 5 years) • Advanced Service: 24x7 phone, web and email support + onsite diagnostics on the next business day • Premium Service: 24x7 phone, web and email support + onsite diagnostics in 4 hours * Optional ** Service may vary by region
Power	• Power supplies: Two 460W • AC voltage: 100VAC @ 8A to 240VAC @ 4A with PFC (auto-switching) • Frequency: 50-60 Hz
Environmental	• Temperature: - Operating: 0 to 40°C without BBU or CBM / 0 to 35°C with BBU or CBM - Non-operating: -40 to 60° • Altitude: Sea level to 3660m (12,000ft) operating / sea level to 12,192m (40,000ft) non-operating • Relative humidity: 5 to 95% non-condensing, operating and non-operating
Dimensions	Without chassis ears / protrusions: 448mm (W) x 88mm (H) x 500mm (D)
Weight	Without HDDs:13.60kg (29.98lbs)
Package Dimensions	770mm (W) x 350mm (H) x 580mm (D)

JB 2012

2U 12-Bay Expansion JBOD



Host 6G SAS | Drive 6G SAS | Infortrend EonStor

Features

- Four 6Gb/s SAS ports
- 2U, 19-inch rackmount
- Redundant, hot-swappable hardware modules

Technical Specifications

Model	JB 2012
Host Ports	Four 6Gb/s SAS ports (2 per controller)
Drive Connectivity	• 6Gb/s SAS connectivity • S.M.A.R.T. support • Automatic bad-sector reassignment • Dedicated bandwidth to each connected drive
Maximum Number of Drives	Per system: 12
Rack Support	2U, 19-inch rackmount
Green Design	• 80 PLUS-certified power supplies delivering more than 80% energy efficiency • Intelligent multi-level drive spin-down
Availability and Reliability	Redundant, hot-swappable hardware modules
Service and Support	• Standard service: 3-year limited hardware/software warranty and 8x5 phone, web, and email support • Upgrade/Extension service*: replacement part dispatch on the next business day (up to 5 years) • Advanced Service: 24x7 phone, web and email support + onsite diagnostics on the next business day • Premium Service: 24x7 phone, web and email support + onsite diagnostics in 4 hours * Optional ** Service may vary by region
Power	• Power supplies: Two 460W • AC voltage: 100VAC @ 8A to 240VAC @ 4A with PFC (auto-switching) • Frequency: 50-60 Hz
Environmental	• Temperature: 0 to 40°C operating/ -40 to 60°C non-operating Altitude: Sea level to 3660m (12,000ft) operating / sea level to 12,192m (40,000ft) non-operating • Relative humidity: 5 to 95% non-condensing, operating and non-operating
Dimensions	Without chassis ears / protrusions: 448mm (W) x 88mm (H) x 500mm (D)
Weight	Without HDDs:11.75kg (25.90lbs)
Package Dimensions	779mm (W) x 642mm (H) x 597mm (D)

JB 2016

3U 16-Bay Expansion JBOD



Host 1G iSCSI | Drive 6G SAS | Infortrend EonStor

Features

- Four 1GbE iSCSI Host Ports
- 3U, 19-inch rackmount
- Redundant, hot-swappable hardware modules

Technical Specifications

Model	JB 2016
Host Ports	Four 6Gb/s SAS ports (2 per controller)
Drive Connectivity	• 6Gb/s SAS connectivity • S.M.A.R.T. support • Automatic bad-sector reassignment • Dedicated bandwidth to each connected drive
Maximum Number of Drives	Per system: 16
Rack Support	3U, 19-inch rackmount
Green Design	• 80 PLUS-certified power supplies delivering more than 80% energy efficiency • Intelligent multi-level drive spin-down
Availability and Reliability	Redundant, hot-swappable hardware modules
Service and Support	• Standard service: 3-year limited hardware/software warranty and 8x5 phone, web, and email support • Upgrade/Extension service*: replacement part dispatch on the next business day (up to 5 years) • Advanced Service: 24x7 phone, web and email support + onsite diagnostics on the next business day • Premium Service: 24x7 phone, web and email support + onsite diagnostics in 4 hours * Optional ** Service may vary by region
Power	• Power supplies: Two 460W • AC voltage: 100VAC @ 8A to 240VAC @ 4A with PFC (auto-switching) • Frequency: 50-60 Hz
Environmental	• Temperature: 0 to 40°C operating/ -40 to 60°C non-operating Altitude: Sea level to 3660m (12,000ft) operating / sea level to 12,192m (40,000ft) non-operating • Relative humidity: 5 to 95% non-condensing, operating and non-operating
Dimensions	Without chassis ears / protrusions: 448mm (W) x 130mm (H) x 500mm (D)
Weight	Without HDDs: 14.05kg (30.97lbs)
Package Dimensions	779mm (W) x 564mm (H) x 597mm (D)

Surveon
Complete Megapixel Solutions

Video Management

- Real-time VI Detection
- Smart Investigative Modes
- Multiple Display Supported
- Centralized Management



VMS Enterprise

Enterprise Video Management Software



Features

- Support for more than 600 IP camera models
- iOS, Android, web, and remote client applications
- Real-time video analytics & smart Investigation
- Advanced thumbnail search & event-based archive search
- Enhanced mapping feature & in-view HTML overlay
- Fisheye de-warp, PAP, and 2-way audio supported
- Seamless integration with leading access control systems and iSCSI storage

Technical Specifications

Model	VMS Enterprise
Live View	• Real-time network camera discovery • Versatile views of various screen divisions • HTML and image overlays • Multiple views supported • View patrolling for single or multiple views • Real time video/event alarm display • Instant playback • Video clip bookmarking • Support 3 installation modes and 5 different fisheye Dewarp display modes • Support PAP(picture in picture) Display • Support 2 way audio
eMAP	• Drag-n-drop camera manipulation • Directional camera display • Hierarchical map structure • Real time event alert • Instant live video of camera • Multiple layer maps supported
PTZ	• Pan, tilt, zoom operations (dependent of camera) • Built-in, floating PTZ control panel • Preset position (dependent of camera) • Scheduled or continuous camera patrolling • Event-driven camera patrolling • Support on Screen PTZ with 8 directional virtual control pad • Support CH Products USB joystick
I/O	• Digital I/O management • Support Ethernet I/O device
Multiple Displays	• Up to 8 monitors • Supports live view, playback, eMap functions • Direct display to secondary monitor(s)

Model	VMS Enterprise
Investigation	• Search by date, time, camera • Search by pre-defined recent time • Search by VI event combinations • Search over multiple days • Search over multiple cameras • Frame by frame / Key frame modes playback • Video clip bookmarking and commenting • Different color display on recorded data • Search via built-in VI analyzer • Customizable bookmark • Intuitive, video thumbnail search results • Cue-in, cue-out and repeat • Quick playback by video thumbnail • 1/8, 1/4, 1/2, 1x, 2x, 4x, 8x play, pause, stop • AVI-formatted video clip export • 4-channel synchronized playback • 5 different time interval scroll bar drag and drop playback • Support full screen playback mode • Support 3 installation modes and 5 different Fisheye Dewarp playback display modes
Instant Playback	• Supported in video alarm, event alarm, view functions • Pre-defined playback durations • Video clip bookmarking
Video Intelligence	• General motion detection • Camera motion detection • Missing object detection • Foreign object detection • Intrusion detection • Forbidden area detection • Tampering detection • Virtual fence • Object counting • Tailgating detection • Go Out detection
Recording Policy	• Supports up to 64 channels megapixel recording • Continuous recording • Manual recording • Event-driven recording along with rules • Scheduled recording on daily or weekday basis • Post alarm recording 5-45 minutes • Pre-alarm recording 5-45 minutes
Rule Manager	• Conditional recording/alert/notification • Email, FTP, SMS, phone,popup window, PTZ,VI Panel,Relay output notifications • Sound, alarm, round-the-clock alerts
Remote Management	• Full functional operation & management via VMS Client
Remote Client	• Web Client • iPhone client • Android Client
3rd Party IPCAM	• ACTi, Arecont Vision, Asoni, AVTECH, AXIS, Bosch, Brickcom, Dahua, D-Link, Dynacolor, EDIMAX, EverFocus, Hikvision, IQinvision, Lilin, Messoa, Mobotix, Panasonic, Samsung, Shany, SIMON, SONY, Sunell, Vivotek
Storage Expansion	• Supports Infortrend RAID storage • Built-in RAID storage management
General & Misc	• Image enhancement • Video privacy mask • Digital zoom in, zoom out • Log viewer, log export mechanism • System lockup • Client auto login • Automatic storage recycling • Client-server architecture • Customized authority account management • Customizable appearance of Surveon logo • Configurable video retention period • Digital watermark proofing • Support DDNS Function • Support NTP Server synchronized • Support Virtual keyboard • Provide System and VI setup Help assistance • Support Customized Event management and log mechanism
Language	• Multiple Language supported on VMS and Web Client: English, French, German, Portuguese, Spanish, Simple Chinese, Traditional Chinese, Italian, Japanese, Russian, Slovak, Czech, Dutch and Polish

Surveon Control Center (SCC)

Centralized Management Solution



Features

- Centralized system with multi-monitor client display
- Advanced matrix wall management
- Unlimited number of cameras, servers and clients
- Scalable client-server architecture
- Central alarm status, data mining & reporting functions
- Multi-level, user-access privilege management
- Data protection and RAID storage management

Hardware Requirements

		<=20	Unlimited
SCC Server	Operating System	64-bit : Windows 7 Ultimate / - Enterprise / - Professional / - Home Premium / -Home Basic	
	CPU	Intel Core i3 3.3GHz or above	Intel Core i7 3.4GHz or above
	RAM	4 GB or above	
	Display Card	nVidia GeForce GT610 1GB or above	
	Hard Drive	SATA 7200 RPM, 500 GB or above	
	Network Interface	1Gbps or above	
SCC Client(+Matrix Wall Client)	Operating System	64-bit : Windows 7 Ultimate / - Enterprise / - Professional / - Home Premium / -Home Basic	
	CPU	Intel Core i7 3.4GHz or above	
	RAM	4 GB or above	
	Display Card	nVidia GeForce GTX 660 2GB or above	
	Hard Drive	SATA 7200 RPM, 500 GB or above	
	Network Interface	1Gbps or above	

Technical Specifications

Model	SCC
General & Miscellaneous	• Unlimited NVR Hosts & IP Device Supported • Live NVR Status & NVR Storage Info • Auto Login & Auto Connection Lost Recovery
Live View (Live Monitoring)	• Unlimited Live View Channels • Video Intelligence Supported • Real-Time Audio Monitoring • HTML and Image Overlays
Multiple Displays	• Unlimited View Monitors Displays • Direct Display to Secondary Monitors • Supports Live View, Playback and eMap Functions • Centralized Matrix Wall Management
E-Map	• Unlimited E-Map Hosts • Hierarchical Map Structure • Multiple Maps Supported • Real Time Event Alert • 4 E-Map Live Video
Playback (Investigation)	• 4 Channels Playback • Instant Playback Supported • Search by Date, Time, Camera, Event Type, VI Event Combinations • Post Search via VI Analyzer • Quick Search via Timeline Navigation Bar
Event Log	• Multiple Event Log (NVR Login/Logout, NVRStart/Stop, Monitor Start/Stop, Schedule Start/Stop, Disk Full, Disk Error, System Recycle, Keep Day Notification, System Abnormal, Network Abnormal, Camera Connection Lost, I/O Connection Lost, Digital Input Trigger, Video Intelligence, Video Lost, IP Change Detection, POSAbnormal Transaction) • Event Notification Setting • Notification of SMS & Email Alerts • Notification of Output Alerts • Alarm Event Priority Define • Event Log Filter (Search by Date, Time, Log Type) • Log File Export
PTZ Control	• Control of Joystick • Remote PTZ Control
Digital I/O Manager	• Centralized I/O Management • On Screen Virtual I/O Buttom

SCC Architecture

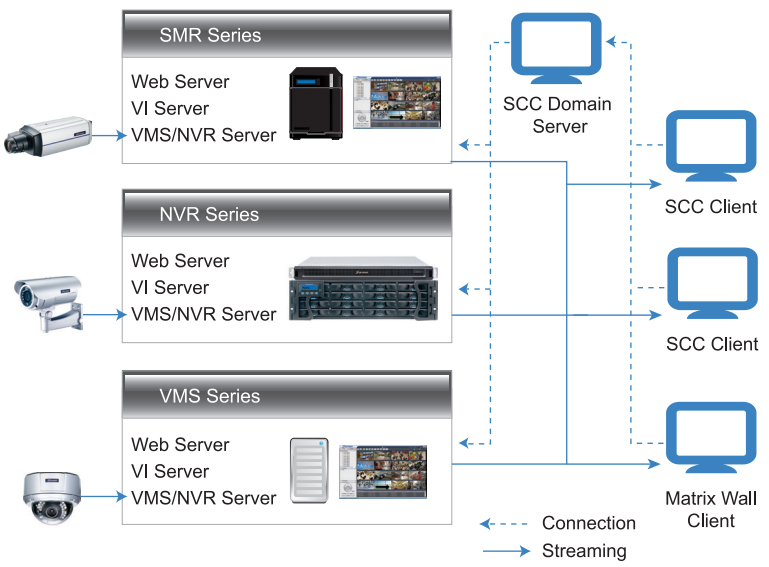

SurveOne

Web-based Easy System Management Tool

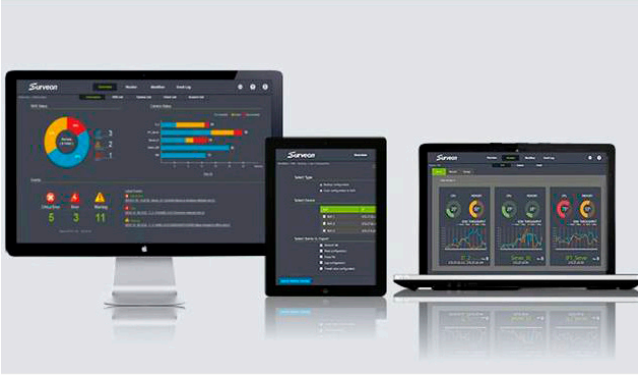

Technical Specifications

Model	SCC
System Monitoring	• NVR/camera system status overview • NVR device/network/storage real-time status monitoring • Camera real-time status monitoring
Configurations	• Easy NVR/camera configuration copy • Easy NVR/camera configuration backup/restore • Easy camera firmware online upgrade • Easy multiple cameras batch setting
Event Log	• NVR/camera real-time event log information • Critical error/error/warning multi-level event classifications

Features

- Real-time System Status Monitoring
- Easy Configuration and Maintenance
- Real-time Classified Event Logs for Quicker Actions
- Monitor Anytime, Anywhere

Surveon
Complete Megapixel Solutions

Accessory



Accessory

CS Mount Lens

Model	YB0LTM6C01G0	YB0LJI5G01G0	YB0LJI6G01G0	YB0LL07K01G0	YB0LL07K02G0
Product Image					
Image Size	1/2.7"	1/2.7"	1/2.5"	1/2"	1/2"
Focal Length	f2.8-8mm	f3.0~10.5mm	f3.3~10.5mm	f4.5~10mm	f8~16mm
Max Aperture	F1.2	F1.4	F1.4	F1.6	F1.6
H.FOV	100.1° - 35.8°	98° - 32°	100° - 30°	85° - 39°	44° - 24°
Iris Control	DC Auto Iris	DC Auto Iris	DC Auto Iris	DC Auto Iris	DC Auto Iris

Peripheral

Model	ZJOYSTICK-0050	ZETHIOBOX-0030	ZPOE08-0030	ZPOE26-0030
Product Image			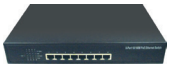	
Features	• 3 axes joysticks for pan / tilt / zoom (P/T/Z) control • Programmable pushbutton switches • USB 1.1 HID compliant "game controller" • Easy to use and operate • Optional programming software • Compatible with Surveon NVR/SMR/VMS Series	• Digital I/O Controlled Via Ethernet - Digital Input * 6 Pins (Active High / Active Low Selectable) - Digital Output * 3 Pins (Active High / Active Low Selectable) • Support 10/100 Mbps Ethernet, auto-detected • Support DHCP Dynamic IP Configuration • Compatible with Surveon NVR/SMR/VMS Series	• 8 port 10/100M Nway (Auto-Negotiation) switch • Fully support 15.4W per port (IEEE 802.3af) • Support 30W per port (IEEE 802.3at) within 113.2W power budget • Compact size (11 inches) with holders for rackmount • Smart plug & play • Internal power supply • 1-year warranty	• Provide 24 10/100Mbps switching ports and 2x gigabit combo (UTP/SFP) ports • Fully support 15.4W per port (IEEE 802.3af) • Support 30W per port within 360W power budget (IEEE 802.3at) • 17.3 inch case with holders for rackmount • Smart plug & play • Internal power supply • 1-year warranty

Model	ZPWR110-0030	ZPWR230-0030	Ztester-0030	YBPICC0001G0
Product Image				
Features	• Power Supply, AC, 110V input, 24V output	• Power Supply, AC, 230V input, 24V output	• 4.3" OLED panel • Capacitive Touch screen • Sunlight Readable • 10/100/1000 Mbps Ethernet RJ-45 port • Cable tester (UTP network cable) • 4 Hours Continuously Display • Rechargeable Li-ion Battery • Support Onvif IP cameras • Carry with Standard Velcro wrist band	• Complying IEEE 802.3 10Base-T, IEEE 802.3u 100Base-TX, • Max Power : 15.4Watt Class3 POE • Support PoE Powered Device (PD) classification identify • Over Current Protection for currents over 15.4Watt • Support LED Diagnostic LED

Camera Housing / Housings Bracket

Model	ZHousing-0010	ZHousing50M-0010	ZBracketP3-0010
Product Image			
Material	Top: ABS & PC / Bottom: Aluminum / Sun-Shield: Aluminum	Top: ABS & PC / Bottom: Aluminum / Sun-Shield: Aluminum	Aluminum
Dimensions (W x H x D)	157 x 130 x 460 mm	157 x 130 x 460 mm	95 x 260 x 100 mm
Suitable Camera (W x H x D)	108 x 75 x 300 mm	108 x 75 x 300 mm	N/A
Features	IP66, IK10 Vandal Proof	IP66, IK10 Vandal Proof, IR LAMP (50M)	• Maximum Load: 10 Kg • Swivel Angle: 360°, Tilt Angle: 90°
Input	AC24V, Output: DC12V(3A), AC24V(Looping)	AC24V, Output: DC12V(3A), AC24V(Looping)	N/A
Consumption	65W	65W	N/A

Accessory

Bracket

Model	ZBracketL-0050	ZBracketL2-0050	ZBracketP3-0010	ZBracketI2-0010	ZBracketI3-0010	ZBracketT1-0010
Product Image						
Material	Metal	Metal	Metal	Metal	Metal	Metal
Dimensions (W x H x D)	145 x 110 x 170 mm	145 x 110 x 170 mm	N/A	184 × 104 × 115.2 mm	348 × 104 × 138.6 mm	250 mm (Height)
Diameter	N/A	N/A	120mm~170mm	45 mm	45 mm	50 mm
Weight	0.5 Kg	0.5 Kg	Body 0.8 Kg, Fixing Ring 0.09 Kg, Screws 0.02 Kg	0.6 Kg	1.5 Kg	1 Kg

Model	ZBracketT2-0010	ZBRACKETP1-0010	ZBRACKETP2-0010	ZBRACKETC1-0010	ZBRACKETC2-0010
Product Image					
Material	Metal	Metal	Metal	Metal	Metal
Dimensions (W x H x D)	500 mm (Height)	270 × 170 × 60 mm	270 × 166 × 155 mm	222 × 204 × 117 mm	232 × 234 × 205 mm
Diameter	50 mm	112 ~ 130 mm	112 ~ 140 mm	N/A	N/A
Weight	1.8 Kg	1 Kg	3.2 Kg	2 Kg	2.7 Kg

Partners

Surveon
Complete Megapixel Solutions

Surveon Headquarters
10F-3, No. 102, Sec. 3, Jhongshan Rd.,
Jhonghe Dist., New Taipei City 235, Taiwan
Tel: +886-2-2226-2966
Fax: +886-2-2226-8278
Inquiry: sales@surveon.com
Marcom: marketing@surveon.com
Technical support: support@surveon.com

USA
Surveon Corporation
435 Lakeside Dr. Sunnyvale,
CA 94085, U.S.A.
Tel: +1-408-988-5728
Fax: +1-408-435-5048
E-mail: sales.us@surveon.com
Technical support: support.us@surveon.com

Europe (EMEA)
Surveon Europe Limited
5 Ringway Centre, Edison Road,
Basingstoke, Hampshire,
RG21 6YH, UK
Tel: +44 (0) 1256 844 566
E-mail: sales.europe@surveon.com
Technical support: support.europe@surveon.com

Japan
Surveon Technology
6F Okayasu Bldg., 1-7-14 Shibaura,
Minato-Ku, Tokyo, 105-0023 Japan
Tel: +81-03-5730-6551
Fax: +81-03-5730-6552
E-mail: sales.jp@infortrend.com
Technical support: support@surveon.com

China
Surveon Technology Inc.
Room 402-403, Tower D, Yuanyang International
Center, East Fourth Ring Central Road,
Chaoyang District, Beijing, China,100025
Tel: +86-10-6310-6168
E-mail: sales.china@surveon.com
Technical support: support.china@surveon.com

Distributed by:

V1.0 2016